USER'S MANUAL
Series MPT91 M1

Via Enrico Fermi, 57/59 - 10091 ALPIGNANO (TO)
☎ Telefono: +39 (0)11 9664616 Fax: +39 (0)11 9664610
E-mail: srlmect@mect.it - C.F. e P.I. 04056380019

ME4018_13
03/17

INDEX

1.0 GENERAL POINTS

The instruments of the family "MPT91" represent a series of " Single Loop" microprocessor temperature regulators in the standard 48x48 dimensions (96 mm. depth.)

The complete version of the MPT91 instrument has the following technical characteristics:

1- Input from Thermoresistance PT100 (scale -40.0 ÷ 200.0°C or -40 ÷ 800°C), or from thermocoupling Fe/CO (0÷600°C) and Cr/Al (0÷1200°C) and Pt-Pt/Rh (0 ÷ 1710°C), or from voltage (0÷ 10 V) and current (0/4 ÷ 20 mA) selectable from the keyboard.

2- Two display to see Set-Point and Process Value and 4 keys for an easy programmability.

3- a contact relay for the regulation of the main intervention point, with regulation ON-OFF or PID.

4- Servomotor control drive.

5- Soft Start and Self Tuning functions.

6- Ramp program with 3 programs with 8 steps each one

Available options:

1- A relay contact for (minimum or maximum) alarms signals or for the cooling process control.

2- Analogue output (0 ÷ 10 V, 4 ÷ 20 mA or 0 ÷ 20 mA) for PID control or read out value.

3- Opto-isolated or standard bi-directional serial transmission line for dialogue with host-computer.

1.1 TECHNICAL CHARACTERISTICS

Table 1

Sensors used	thermoresistance PT100 at 2 or 3 wires: **PT r:** -40.0 ÷ 200.0 °C; **Pt E:** -40 ÷ 800°C; Thermocouplings: **Fe/Co (J):** 0 ÷ 600 °C; **Cr/Al (K):** 0 ÷ 1200 °C; **Pt/Pt-10% Rh (S):** 0 ÷ 1710 °C
Analogue inputs	0 ÷ 10 V – 0 ÷ 20 mA – 4 ÷ 20 mA
Input current resistance	5 Ω
Input voltage resistance	1 MΩ
Data reading precision	0.5% F.S. ±1 digit ± 1 degree
Controls	on-off / pid
On-Off Set Up	HY in the range 0 ÷ F.S. °C/°F
Pid Set Up	**cycle time in the range**:1 ÷ 200 sec

	proportional band: 0 ÷ F.S. °C/°F **integrative time**: 0 ÷ 6000 sec. **derivative time**: 0 ÷ 600 sec **cutback const**.: 0 ÷ F.S. °C/°F
Alarms	of min. or max in the range: 0 ÷ F.S. °C/°F
Main Outputs	relay contact 220V /5A
Alarm output	relay contact 220V /5A
Power supply	90 ÷ 260 Vac/Vdc 20÷30Vac/Vdc
Analogue outputs	0 ÷ 10 V – 0 ÷ 20 mA – 4 ÷ 20 mA
Max load for current output	300 Ω
Min load for voltage output	1 KΩ
Max voltage given	10 V
Max current given	20 mA
Resolution	12 bits

1.2 DISPLAY MESSAGES

The following table shows a summary of all the messages that the instrument can show on the display. Some are operating signals, others are indications of anomalies or non performance. In these cases we ask you to consult the instruction manual and the service centre, as necessary.

Table 2

r01.2	Release Software
LO	temperature under input range, or connection error for the PT100 sensor
HI	temperature above input range
Err	sensor interrupted or malfunctioning input circuit
Err1, Err2, Err3, Err4	See “Self-Tuning function”
Abort	See “Soft Start” and “Self Tuning” functions

1.3 MPT INSTRUMENT CONNECTION OVERVIEW

DESCRIPTION OF THE FRONT COMMANDS

PV-Upper Display: temperature as read by sensor
SP-Lower Display: set-point (power percentage on manual control)
Led AL: alarm status indication or cooling action or servomotor control drive (if requested)
Led R: ramp function indication
Led ON: load control indication

Key Enter : access to the programming functions

Key Sp+ ▲ : increase set-point. Used for programming function

Key Sp- ▶ : decrease set-point. Used for programming function

Key Ramp Exit : enter the enable Ramp programs (disabled of the menu)

Key Ramp Exit + Enter : START/STOP functions. Only ramp functions (disabled of the ramp menu)

Key Sp+ ▲ + Sp- ▶ Keys : % power indication

MPT91 M1

DESCRIPTION OF THE TERMINAL BOARD

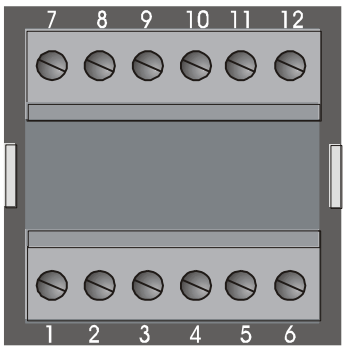

Terminals 1 ÷ 3:	inputs for sensor
Terminal 3:	transducer power supply (see configurations)
Terminals 4 ÷ 6:	analogue outputs (OAP option) or serial output (if requested)
Terminals 4, 6:	enable second set-point (if RSP option is requested)
Terminals 7, 8:	instrument power supply. Between terminals 7 and 8 power from 90V to 260V , or from 10V to 30V if requested.
Terminals 9, 10:	contact NO of main relay (A option) or static output (C option) or alarm 2 conctat (OAP option) and analogue output control.
Terminals 11, 12:	contact NO of alarm relay (if requested: 03 option)

CONNECTIONS PT100

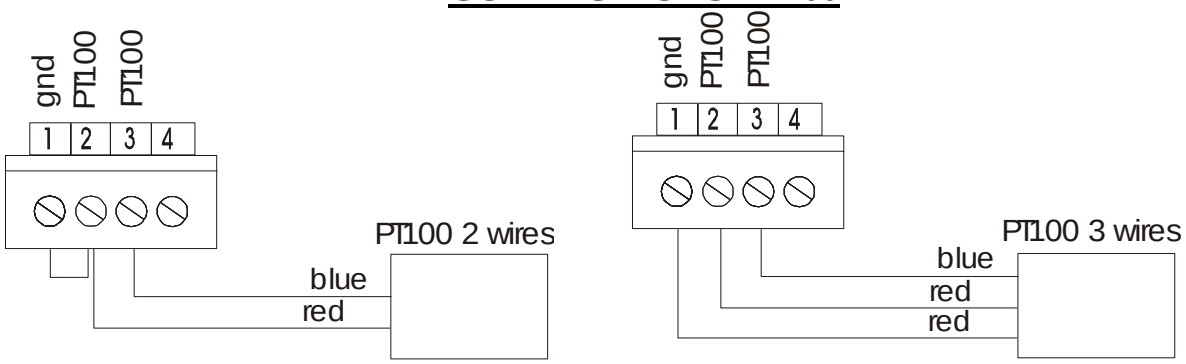

For thermoresistance connection pay attention to the line resistance: if it is too high there may be some errors in readout. Use the same kind of wire for the three connections. If shielded cable is used, connect the shield to ground at one end only.
Attention: control inside configuration.

THERMOCOUPLING CONNECTIONS

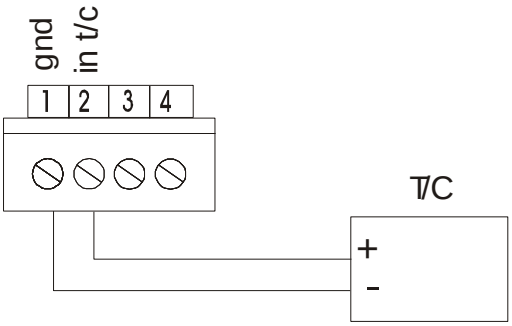

Thermocouplings must be isolated. For thermocoupling connection use only compensated wire for the type of thermocouple in use.
If shielded cable is used, connect the shield to ground at one end only.

VOLTAGE OR CURRENT INPUT CONNECTIONS

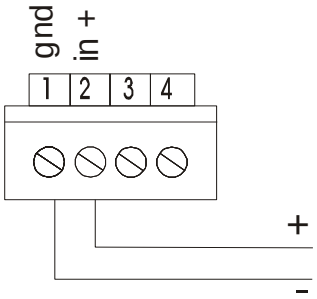

CURRENT/VOLTAGE INPUT CONNECTIONS WITH TRANSDUCER POWER SUPPLY

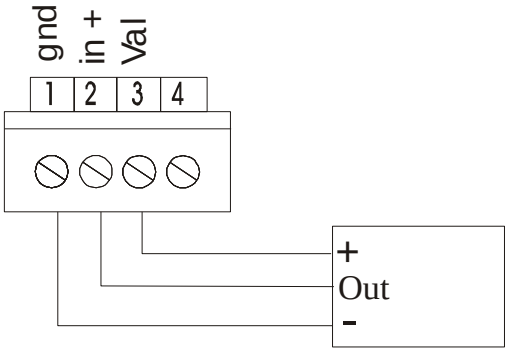

This connection can be used if the transducer power supply is configured (see TERMINAL 3 CONFIGURATION).

STATIC OUTPUTS CONNECTIONS

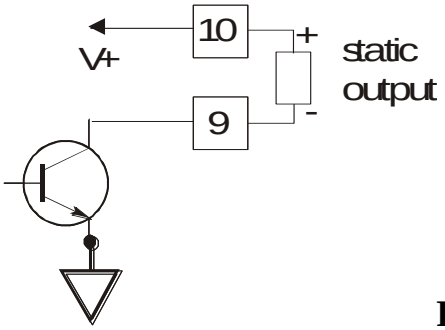

Be careful: this output is not isolated and may be used for an external solid state relay with double isolation between instrument and power line.

RELAY CONNECTIONS

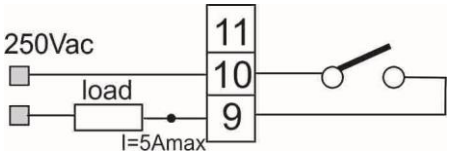

OPTION “A”

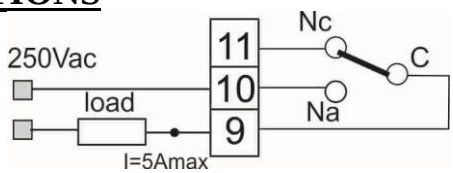

OPTION “F”

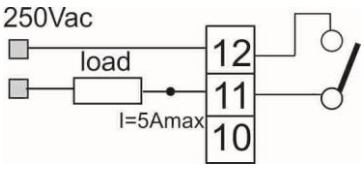

ALARM CONCTACT (not available with “F” option)

SERVOMOTOR CONNECTIONS

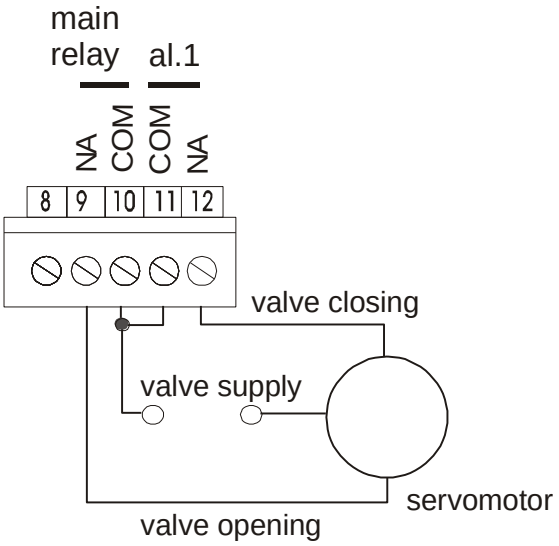

TERMINAL 3 CONFIGURATION (TRANSDUCER POWER SUPPLY)

Open the instrument and set the jumper JP2 for a PT100 input (standard) or for a transducer power supply connection.

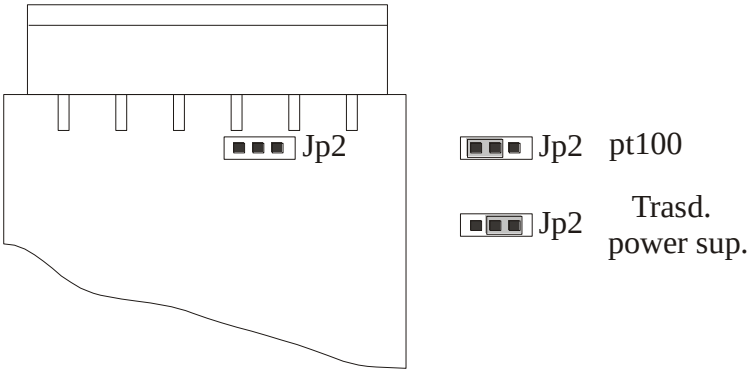

SERIAL OUTPUTS AND ANALOGUE OUTPUTS CONNECTIONS

See dedicated paragraphs.

2.0 INSTALLATION NOTES

1. Copy the connection schemes on pages 6, 7 and 8 taking into account the following points:
   a- the instrument can operate with analogue inputs or temperature sensors of both thermoresistance and thermocoupling types. Only one of this sensors can be connected (attach the connection only for the chosen sensor, leaving free the other connections.).
   b- the connector diagram shows all the possible options that the instrument may have; if certain options are not required then the relative connections are not necessary.
2. Follow the instructions of the paragraph:
   - 2.1: for heating or cooling control
   - 2.2: for heating and cooling control
   - 2.3: for a servomotor control
   - 2.4: for a valves control
3. Follow the instructions of the paragraph "Regulations" to optimise control parameters.
4. If the instrument is requested with “OAP” option, it is necessary to consider the paragraph "ANALOGUE OUTPUT".
5. If the instrument is requested with the serial output, see the paragraph "SERIAL OUTPUT".

2.1 INSTRUMENT WITH HEATING ONLY CONTROL

Heating (tCOn = in) or cooling (tCOn = dir) regulation is performed by main relay; it is possible to use one alarm output (if requested) and the analogue output (if requested) that varies with the temperature readout.
Program the instrument following the table below; by “Ramp/Exit” key it is possible to escape immediately from the menu.
To set up control parameters see paragraph "Regulations".
For an automatic set point function, see paragraph "Ramp programming".

Attention: If out of range menu’s item are programmed, they are proposed again at the maximum possible value**.**
To reset to factory default parameters you can see the paragraph “Default parameters”.

2.1.1 DIAGRAM MENU WITH HEATING OR COOLING CONTROL

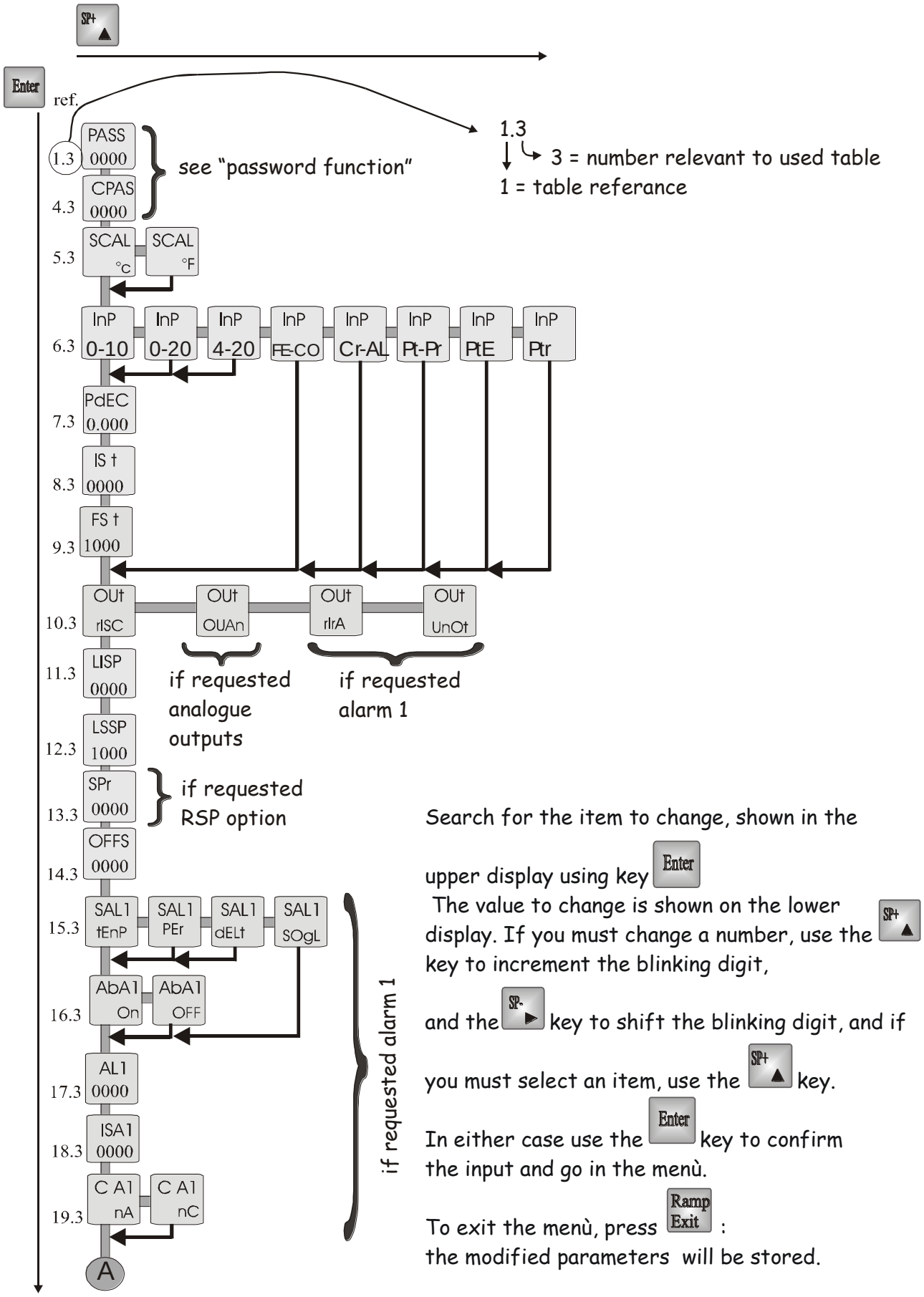

Search for the item to change, shown in the upper display using key Enter

The value to change is shown on the lower display. If you must change a number, use the SP+ key to increment the blinking digit,

and the SP- key to shift the blinking digit, and if you must select an item, use the SP+ key.

In either case use the Enter key to confirm the input and go in the menù.

To exit the menù, press Ramp Exit :
the modified parameters will be stored.

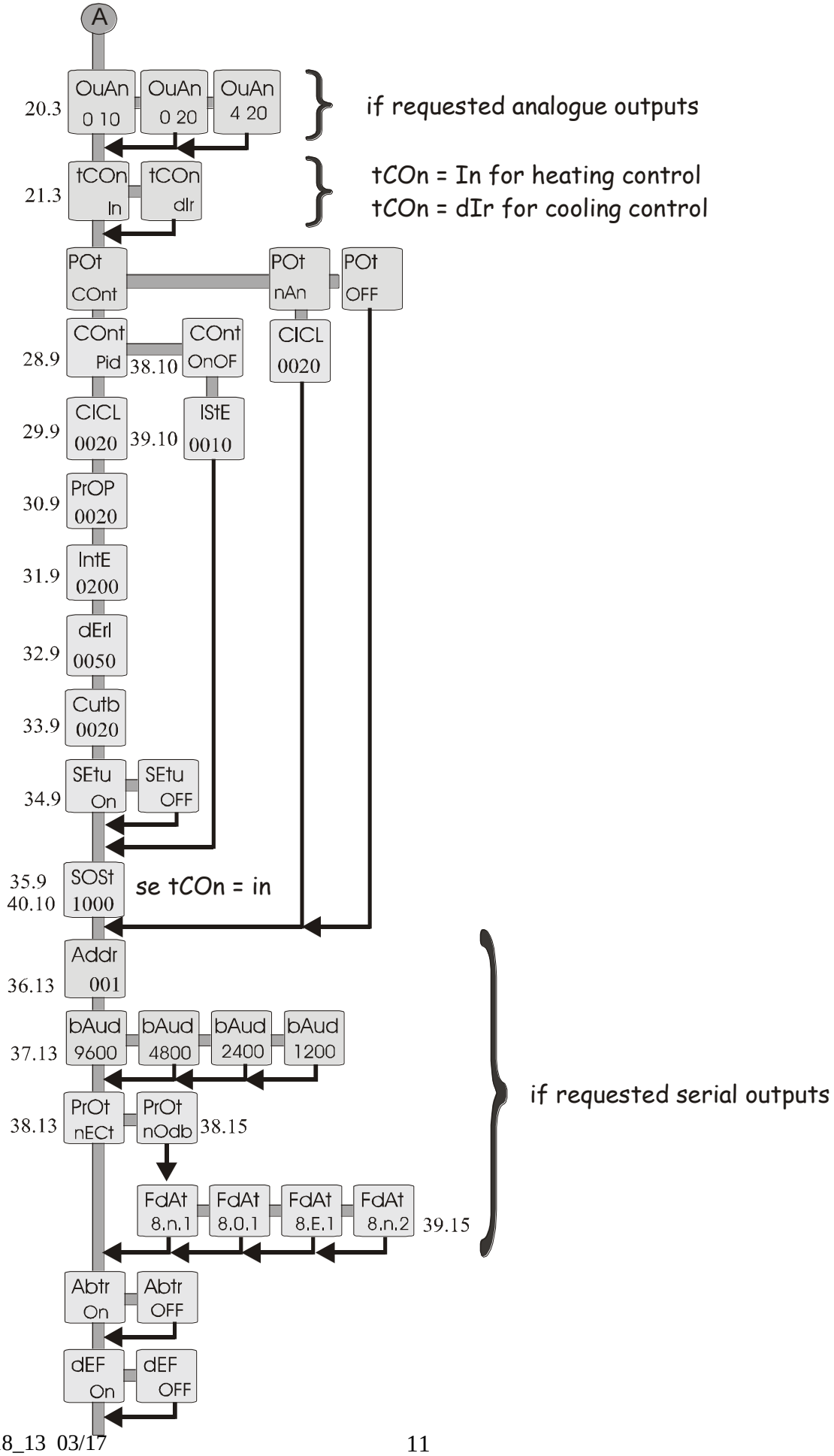
A
20.3
OuAn 0 10
OuAn 0 20
OuAn 4 20
if requested analogue outputs
21.3
tCOn In
tCOn dIr
tCOn = In for heating control
tCOn = dIr for cooling control
POt COnt
POt nAn
POt OFF
28.9
COnt Pid
38.10
COnt OnOF
CICL 0020
29.9
CICL 0020
39.10
IStE 0010
30.9
PrOP 0020
31.9
IntE 0200
32.9
dErI 0050
33.9
Cutb 0020
34.9
SEtu On
SEtu OFF
35.9
40.10
SOSt 1000
se tCOn = in
36.13
Addr 001
37.13
bAud 9600
bAud 4800
bAud 2400
bAud 1200
38.13
PrOt nECt
PrOt nOdb
38.15
FdAt 8.n.1
FdAt 8.0.1
FdAt 8.E.1
FdAt 8.n.2
39.15
if requested serial outputs
Abtr On
Abtr OFF
dEF On
dEF OFF

Table 3

ref.	touch key	appears on PV display	appears on SP display	NOTES	See page
1	enter	PASS	0 000	In this phase the instrument asks for the Password in order to save the data already programmed. The number memorized by the factory is 0, but any number between 0 and 9999 can be memorized by writing where CPAS appears (next displayed item).	Pp 64
2	SP- ▶	PASS	0 0 00	Set Up Procedure. To digit the desired number touch the key " SP- ▶ " to move the flashing number to the right.	
3	SP+ ▲	PASS	0 1 00	Touch the key " SP+ ▲ " to increase the flashing number	
4	enter	CPAS	0 000	Number of the access key to the programming of the instrument. The number written in this phase will be requested at "PASS". To digit the number follow the procedure described in points 2 and 3.	Pp 64
5	enter	SCAL	°C	Temperature scale: Choose the type of scale required. Set the requested scale (°C or °F) by "SP+ ▲ " and confirm with "enter".	
6	enter	InP	PtE	Choose the type of sensor required. Touch the key "SP+ ▲ " until the chosen input appears on "SP" display: FECO = Fe/CO (0 ÷ 600 °C) (J) CrAL = Cr/Al (0 ÷ 1200 °C) (K) PtPr = Pt/Pt-Rh (0 ÷ 1710°C) (S) PtE = PT100 (-40 ÷ 800 °C) Ptr = PT100 (- 40.0 ÷ 200.0 °C) 0 10 = analogue input 0-10V 0 20 = analogue input 0-20mA 4 20 = analogue input 4-20mA To change this item use the "SP+ ▲ " key and confirm by "enter"	Pp 31
7	enter	PdEC	0.000	Decimal point for analogue input. Touch the key "SP+ ▲ " to set the decimal point and confirm with	

ref.	touch key	appears on PV display	appears on SP display	NOTES	See page
				"enter"	
8	enter	IS t	0000	Set the requested reading with the beginning of the analogue input. To digit the number see 2 and 3 paragraphs.	Pp 31
9	enter	FS t	1000	Set the requested reading with the full scale of the analogue input. To digit the number see 2 and 3 paragraphs.	Pp 31
10	enter	Out	rISC	Choose rISC for heating regulation with the main relay. Set the requested regulation by “SP+▲” and confirm with “enter“.	
11	enter	LISP	0 000	Lower limit set-point. To digit the number follow the procedure described in points 2 and 3	Pp 31
12	enter	LSSP	0 000	Upper limit set-point. To digit the number follow the procedure described in points 2 and 3	Pp 31
13	enter	SPr	0 000	Setpoint remote value set up (if requested). To digit the number follow the procedure described in points 2 and 3	
14	enter	OFFS	0 000	Using the number "OFFS" it is possible to correct the displayed temperature by adding or subtracting a constant written in the display "PV". To digit the number follow the procedure described in points 2 and 3	
15	enter	S.AL1	tEnP	Selection the kind of working Alarm1 tEnP = min or max absolute alarm value PEr = percentage alarm dELt = relative alarm at the set point SOGL = max absolute alarm value To change this item use the “SP+▲“ key and confirm by “enter”	
16	enter	AbA1	On	Minimum alarm 1 enable. On: Minimum alarm relay is always enabled OFF: Minimum alarm relay is	Pp 32

ref.	touch key	appears on PV display	appears on SP display	NOTES	See page
				enabled after the first time the temperature reaches the alarm value To change this item use the “SP+▲“ key and confirm by “enter”	
17	enter	AL1	0 000	Alarm value set up (if requested). To digit the value see steps 2 and 3. An alarm can work as minimum alarm (if < set-point) or maximum alarm (if > set-point).	Pp 32
18	enter	ISA1	001	Alarm 1 hysteresis set up	Pp 32
19	enter	C A1	nA	Possibility of inverting the relay function nA = normally open nC = normally closed Set the requested regulation by “SP+▲” and confirm with “enter“.	Pp 32
20	enter	OUAn	0 10	If analogue outputs are requested touch the key "SP+▲" until the output required appears on the display and then confirm with "enter". 0 10 = output 0 ÷ 10 V 0 20 = output 0 ÷ 20 mA 4 20 = output 4 ÷ 20 mA	Pp 33
21	enter	tCOn	In	Control type: In = reverse function (main relay = heating) DIr = direct function To change this item use the “SP+▲“ key and confirm by “enter”	
	Ramp/ Exit	Read out	Set point		

2.2 INSTRUMENT WITH HEATING AND COOLING CONTROL

The instrument with heating and cooling control can be used only if the instrument has the alarm relay. In this function, the main relay makes the heating regulation and the alarm relay makes the cooling regulation. The analogue outputs (if requested) change in according to the Process Value.
Program the instrument following the table below; by “Ramp/Exit” key it is possible to escape immediately from the menu. Selecting heating-cooling control the instrument also gives the cooling dead-band item (bAnr).
To set up control parameters see paragraph "Regulations".
For an automatic set point function, see paragraph "Ramp programming".

Attention: If out of range menu’s item are programmed, they are proposed again at the maximum possible value**.**
To reset to factory default parameters you can see the paragraph “Default parameters”.

2.2.1 DIAGRAM MENU WITH HEATING AND COOLING CONTROL

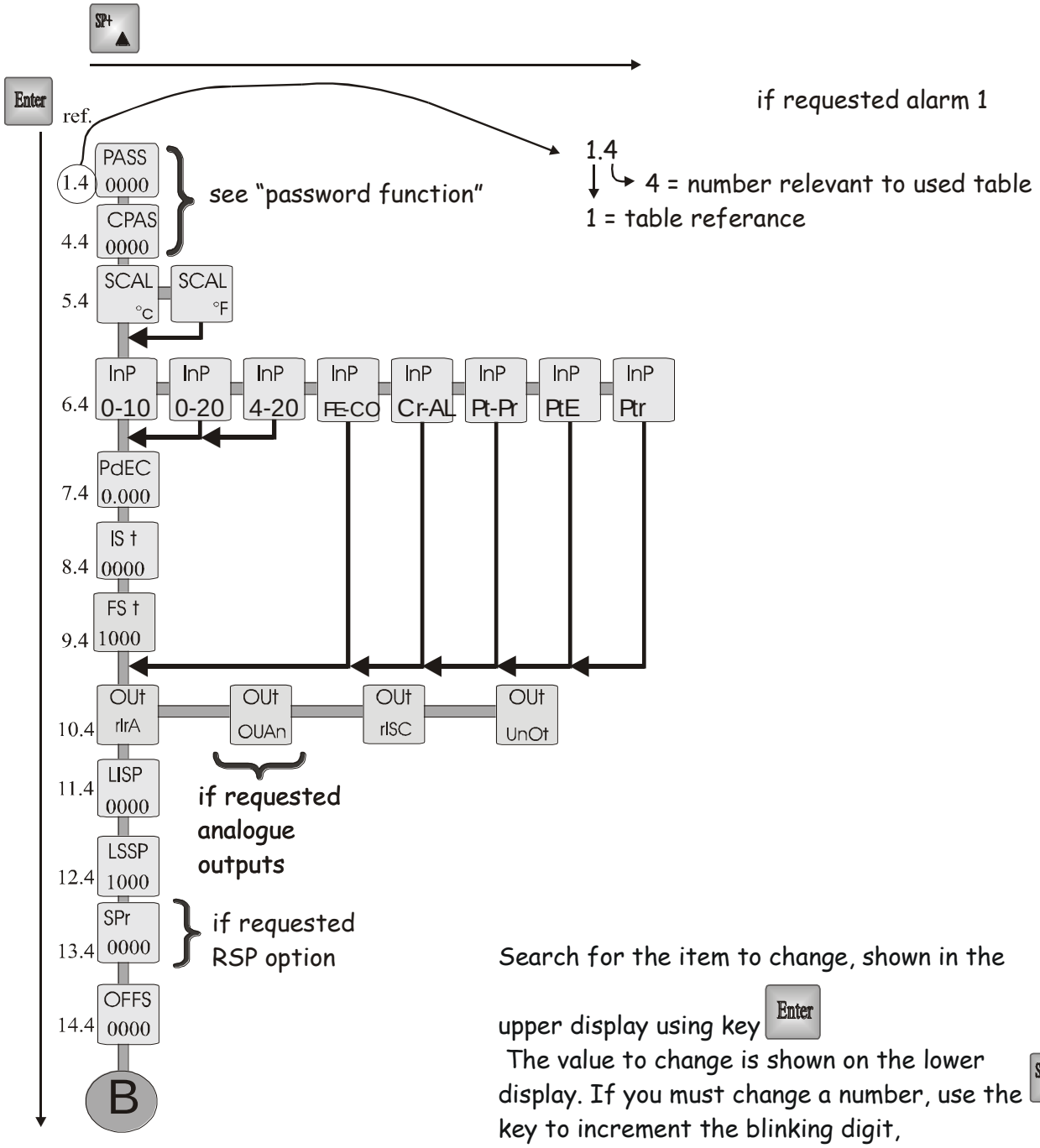

Search for the item to change, shown in the upper display using key Enter

The value to change is shown on the lower display. If you must change a number, use the SP+ key to increment the blinking digit,

and the SP- key to shift the blinking digit, and if you must select an item, use the SP+ key.

In either case use the Enter key to confirm the input and go in the menù.

To exit the menù, press Ramp Exit :
the modified parameters will be stored.

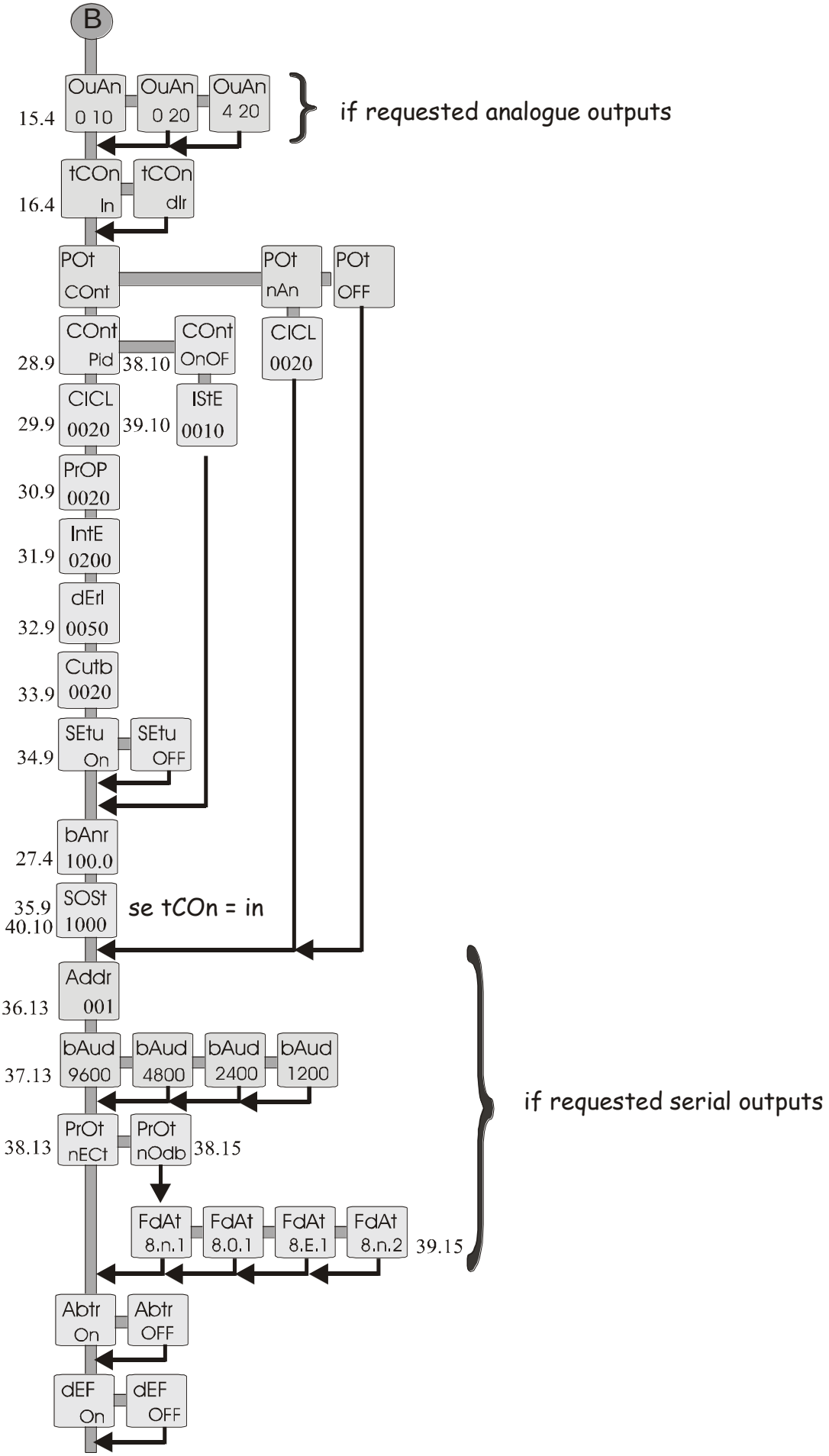
B
OuAn 0 10
OuAn 0 20
OuAn 4 20
15.4
if requested analogue outputs
tCOn In
tCOn dIr
16.4
POt COnt
POt nAn
POt OFF
COnt Pid
38.10
COnt OnOF
ClCL 0020
28.9
ClCL 0020
39.10
IStE 0010
29.9
PrOP 0020
30.9
IntE 0200
31.9
dErI 0050
32.9
Cutb 0020
33.9
SEtu On
SEtu OFF
34.9
bAnr 100.0
27.4
SOSt 1000
35.9
40.10
se tCOn = in
Addr 001
36.13
bAud 9600
bAud 4800
bAud 2400
bAud 1200
37.13
if requested serial outputs
PrOt nECt
PrOt nOdb
38.13
38.15
FdAt 8.n.1
FdAt 8.0.1
FdAt 8.E.1
FdAt 8.n.2
39.15
Abtr On
Abtr OFF
dEF On
dEF OFF

Table 4

ref.	touch key	appears on PV display	appears on SP display	NOTES	See page
1	enter	PASS	0 000	In this phase the instrument asks for the Password in order to save the data already programmed. The number memorized by the factory is 0, but any number between 0 and 9999 can be memorized by writing where CPAS appears (next displayed item).	Pp 64
2	SP- ▶	PASS	0 0 00	Set Up Procedure. To digit the desired number touch the key " SP- ▶ " to move the flashing number to the right.	
3	SP+ ▲	PASS	0 1 00	Touch the key " SP+ ▲ " to increase the flashing number	
4	enter	CPAS	0 000	Number of the access key to the programming of the instrument. The number written in this phase will be requested at "PASS". To digit the number follow the procedure described in points 2 and 3.	Pp 64
5	enter	SCAL	°C	Temperature scale: Choose the type of scale required. Set the requested scale (°C or °F) by “SP+ ▲ ” and confirm with “enter“.	
6	enter	InP	PtE	Choose the type of sensor required. Touch the key “SP+ ▲ “ until "SP" display appears on the chosen input: FECO = Fe/CO (0 ÷ 600 °C) (J) CrAL = Cr/Al (0 ÷ 1200 °C) (K) PtPr = Pt/Pt-Rh (0 ÷ 1710°C) (S) PtE = PT100 (-40 ÷ 800 °C) Ptr = PT100 (- 40.0 ÷ 200.0 °C) 0 10 = analogue input 0-10V 0 20 = analogue input 0-20mA 4 20 = analogue input 4-20mA To change this item use the	Pp 31

ref.	touch key	appears on PV display	appears on SP display	NOTES	See page
				“SP+▲“ key and confirm by “enter”	
7	enter	PdEC	0.000	Decimal point for analogue input. Touch the key “SP+▲“ to set the decimal point and confirm with "enter"	
8	enter	IS t	0000	Set the requested reading with the beginning of the analogue input. To digit the number see 2 and 3 paragraphs.	Pp 31
9	enter	FS t	1000	Set the requested reading with the full scale of the analogue input. To digit the number see 2 and 3 paragraphs.	Pp 31
10	enter	Out	rIrA	rIrA: heating-cooling Set the requested regulation by “SP+▲” and confirm with “enter“.	
11	enter	LISP	0 000	Lower limit set-point. To digit the number follow the procedure described in points 2 and 3	Pp 31
12	enter	LSSP	0 000	Upper limit set-point. To digit the number follow the procedure described in points 2 and 3	Pp 31
13	enter	SPr	0 000	Setpoint remote value set up (if requested). To digit the number follow the procedure described in points 2 and 3	
14	enter	OFFS	0 000	Using the number "OFFS" it is possible to correct the displayed temperature by adding or subtracting a constant written in the display "PV". To digit the number follow the procedure described in points 2 and 3	
15	enter	OUAn	0 10	If analogue output is requested touch the key "SP+▲" until the output required appears on the display and then confirm with "enter". 0 10 = output 0 ÷ 10 V 0 20 = output 0 ÷ 20 mA	Pp 33

ref.	touch key	appears on PV display	appears on SP display	NOTES	See page
				4 20 = output 4 ÷ 20 mA	
16	enter	tCOn	In	Control type: In = reverse function (main relay = heating) DIr = direct function To change this item use the "SP+▲" key and confirm by "enter"	
27	enter	bAnr	10.0	Touch "enter" the key until the item bAnr appears = cooling dead band (see paragraph)	Pp 35
	Ramp/ Exit	Read out	Set point		

2.3 INSTRUMENT WITH SERVOMOTOR CONTROL

The UnOt function can be used only if the instrument has the alarm relay. In this function, the main relay together with alarm relay control the servomotor. Selecting the item " out = UnOt ", there are other two values to set for the control: " time "(time that the servomotor needs for its cycle) and " bAnO " (dead band for the servomotor). In " time " it is necessary to set the full scale time (in seconds and tenth of second **)** that the servomotor needs to complete its cycle, while in "bAnO" it is possible to set an interval (expressed in percentage of "time ") where the servomotor doesn't have the control. Example: full scale "time " 90 seconds, dead band: 10%. The displacements shorter than 9 seconds are inhibited.
The analogue outputs (if requested) change in according to the Process Value.
Program the instrument following the table below; by "Ramp/ Exit" key it is possible to escape immediately from the menu.
To set up control parameters see paragraph "Regulations".
For an automatic set point function, see paragraph "Ramp programming".

Attention: If out of range menu's item are programmed, they are proposed again at the maximum possible value**.**
To reset to factory default parameters you can see the paragraph "Default parameters".

2.3.1 DIAGRAM MENU WITH SERVOMOTOR CONTROL

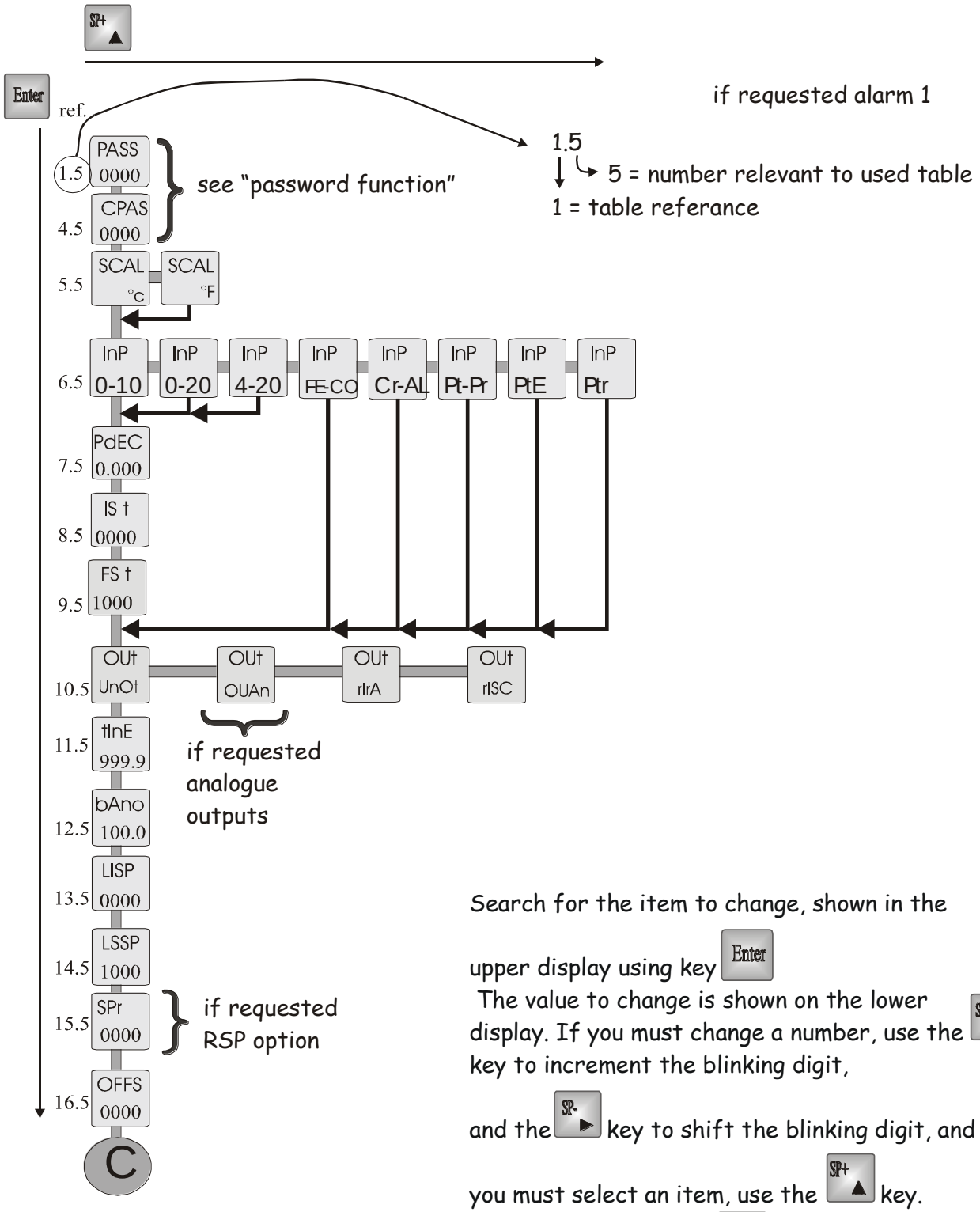

Search for the item to change, shown in the upper display using key Enter

The value to change is shown on the lower display. If you must change a number, use the SP+ key to increment the blinking digit,

and the SP- key to shift the blinking digit, and if you must select an item, use the SP+ key.

In either case use the Enter key to confirm the input and go in the menù.

To exit the menù, press Ramp Exit :
the modified parameters will be stored.

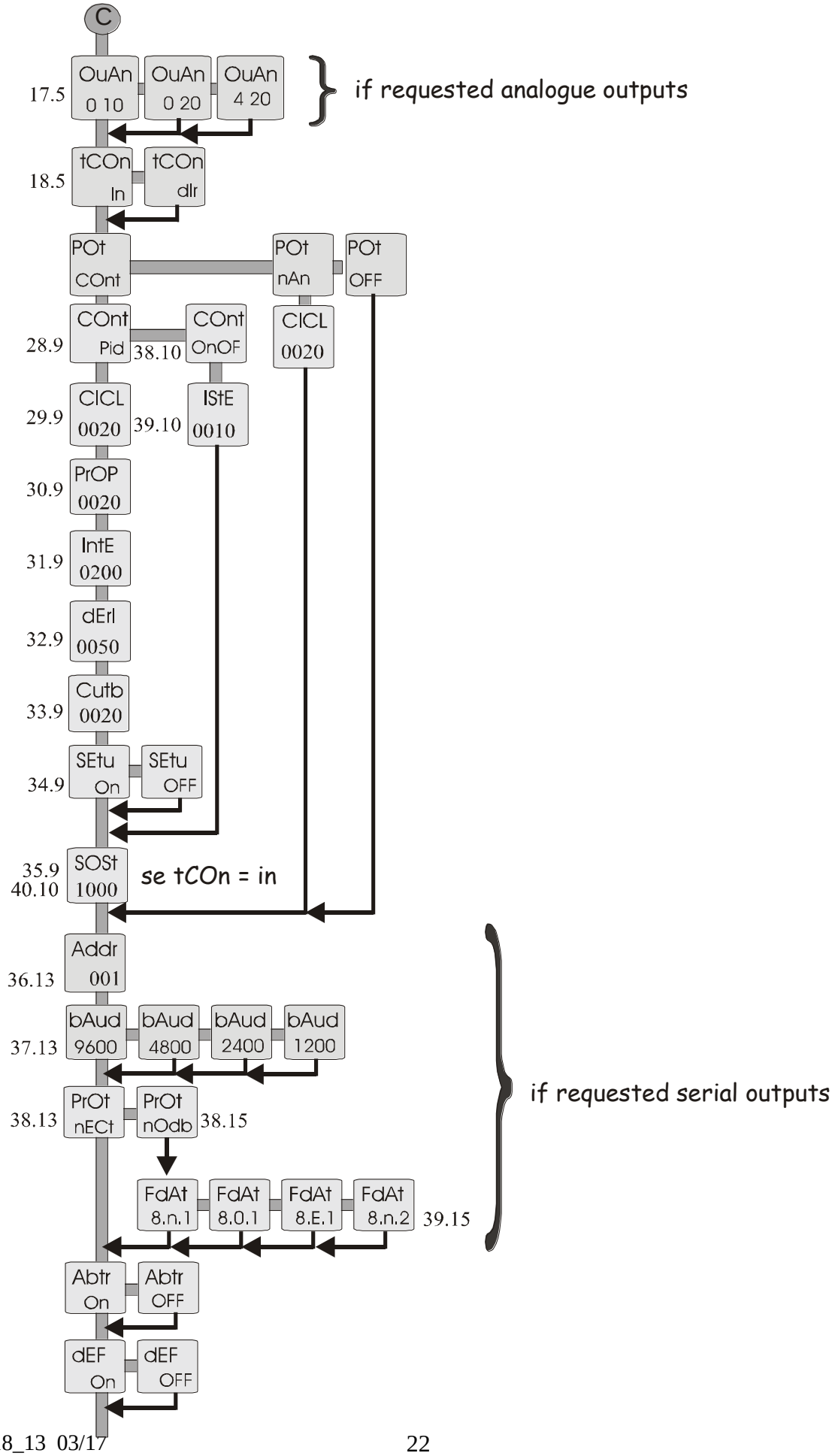
C
17.5
OuAn 0 10
OuAn 0 20
OuAn 4 20
if requested analogue outputs
18.5
tCOn In
tCOn dIr
POt COnt
POt nAn
POt OFF
28.9
COnt Pid
38.10
COnt OnOF
ClCL 0020
29.9
ClCL 0020
39.10
IStE 0010
30.9
PrOP 0020
31.9
IntE 0200
32.9
dErl 0050
33.9
Cutb 0020
34.9
SEtu On
SEtu OFF
35.9
40.10
SOSt 1000
se tCOn = in
36.13
Addr 001
37.13
bAud 9600
bAud 4800
bAud 2400
bAud 1200
38.13
PrOt nECt
PrOt nOdb
38.15
FdAt 8.n.1
FdAt 8.0.1
FdAt 8.E.1
FdAt 8.n.2
39.15
if requested serial outputs
Abtr On
Abtr OFF
dEF On
dEF OFF

Table 5

ref.	touch key	appears on PV display	appears on SP display	NOTES	See page
1	enter	PASS	0 000	In this phase the instrument asks for the Password in order to save the data already programmed. The number memorized by the factory is 0, but any number between 0 and 9999 can be memorized by writing where CPAS appears (next displayed item).	Pp 64
2	SP- ▶	PASS	0 0 00	Set Up Procedure. To digit the desired number touch the key " SP- ▶ " to move the flashing number to the right.	
3	SP+ ▲	PASS	0 1 00	Touch the key " SP+ ▲ " to increase the flashing number	
4	enter	CPAS	0 000	Number of the access key to the programming of the instrument. The number written in this phase will be requested at "PASS". To digit the number follow the procedure described in points 2 and 3.	Pp 64
5	enter	SCAL	°C	Temperature scale: Choose the type of scale required. Set the requested scale (°C or °F) by “SP+ ▲ ” and confirm with “enter “.	
6	enter	InP	PtE	Choose the type of sensor required. Touch the key “SP+ ▲ “ until "SP" display appears on the chosen input: FECO = Fe/CO (0 ÷ 600 °C) (J) CrAL = Cr/Al (0 ÷ 1200 °C) (K) PtPr = Pt/Pt-Rh (0 ÷ 1710°C) (S) PtE = PT100 (-40 ÷ 800 °C) Ptr = PT100 (- 40.0 ÷ 200.0 °C) 0 10 = analogue input 0-10V 0 20 = analogue input 0-20mA 4 20 = analogue input 4-20mA To change this item use the “SP+ ▲ “ key and confirm by “enter”	Pp 31
7	enter	PdEC	0.000	Decimal point for analogue input.	

ref.	touch key	appears on PV display	appears on SP display	NOTES	See page
				Touch the key “SP+▲“ to set the decimal point and confirm with "enter"	
8	enter	IS t	0000	Set the requested reading with the beginning of the analogue input. To digit the number see 2 and 3 paragraphs.	Pp 31
9	enter	FS t	1000	Set the requested reading with the full scale of the analogue input. To digit the number see 2 and 3 paragraphs.	Pp 31
10	enter	Out	UnOt	UnOt: servomotor control. Set the requested regulation by “SP+▲” and confirm with “enter“.	
11	enter	tInE	999.9	SERVOMOTOR TIME. Program the servomotor’s time in seconds and second’s decimals and confirm with “enter”	
12	enter	bAnO	10.0	DEAD BAND. Dead band, expressed in %, in which the servomotor is not piloted. Confirm with “enter”.	
13	enter	LISP	0 000	Lower limit set-point. To digit the number follow the procedure described in points 2 and 3	Pp 31
14	enter	LSSP	0 000	Upper limit set-point. To digit the number follow the procedure described in points 2 and 3	Pp 31
15	enter	SPr	0 000	Setpoint remote value set up (if requested). To digit the number follow the procedure described in points 2 and 3	
16	enter	OFFS	0 000	Using the number "OFFS" it is possible to correct the displayed temperature by adding or subtracting a constant written in the display "PV". To digit the number follow the procedure described in points 2 and 3	
17	enter	OUAn	0 10	If analogue output is requested touch the key "SP+▲" until the	Pp 33

ref.	touch key	appears on PV display	appears on SP display	NOTES	See page
				output required appears on the display and after confirm with "enter" 0 10 = output 0 ÷ 10 V 0 20 = output 0 ÷ 20 mA 4 20 = output 4 ÷ 20 mA	
18	enter	tCOn	In	Control type: In = reverse function (main relay = heating) dIr = direct function for cooling function To change this item use the “SP+▲“ key and confirm by “enter”	
	Ramp/ Exit	Readout	Set point		

2.4 INSTRUMENT WITH A VALVE CONTROL

The OUAn function can be used only if the instrument has the analogue outputs. See paragraph “Analogue outputs“.
The voltage heating regulation can be linked to 6 (+) and 4 (-) terminals, the current heating regulation can be linked to 5 (+) and 4 (-) terminals.
Program the instrument following the table below; by “Ramp/Exit” key it is possible to escape immediately from the menu.
For an heating control set “tCOn = In” and for a cooling control set “tCOn = dIr”.
To set up control parameters see paragraph "Regulations".
For an automatic set point function, see paragraph "Ramp programming".

Attention: If out of range menu’s item are programmed, they are proposed again at the maximum possible value**.**
To reset to factory default parameters you can see the paragraph “Default parameters”.

2.4.1 DIAGRAM MENU WITH A VALVE CONTROL

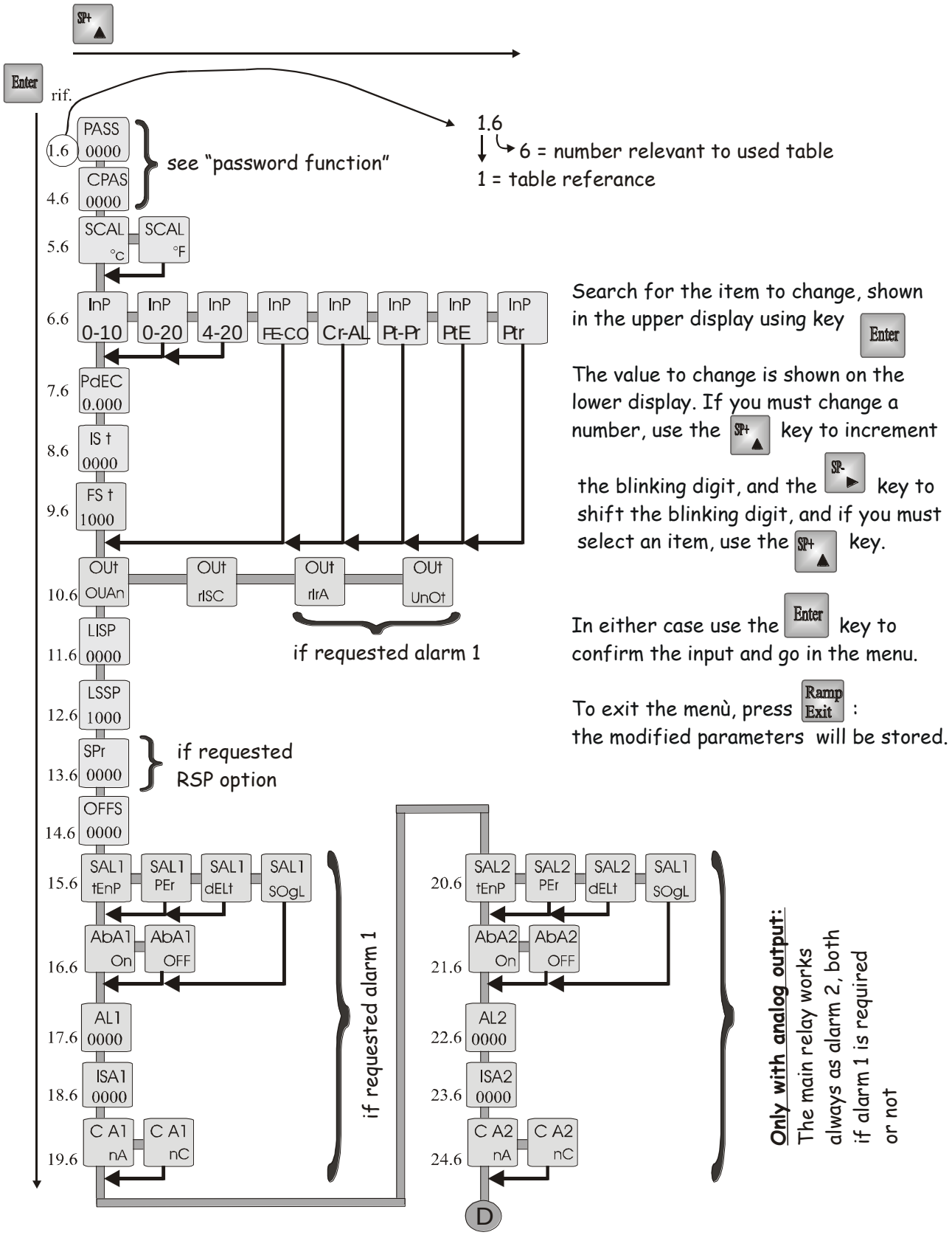

Search for the item to change, shown in the upper display using key Enter

The value to change is shown on the lower display. If you must change a number, use the SP+ key to increment the blinking digit, and the SP- key to shift the blinking digit, and if you must select an item, use the SP+ key.

In either case use the Enter key to confirm the input and go in the menu.

To exit the menù, press Ramp Exit : the modified parameters will be stored.

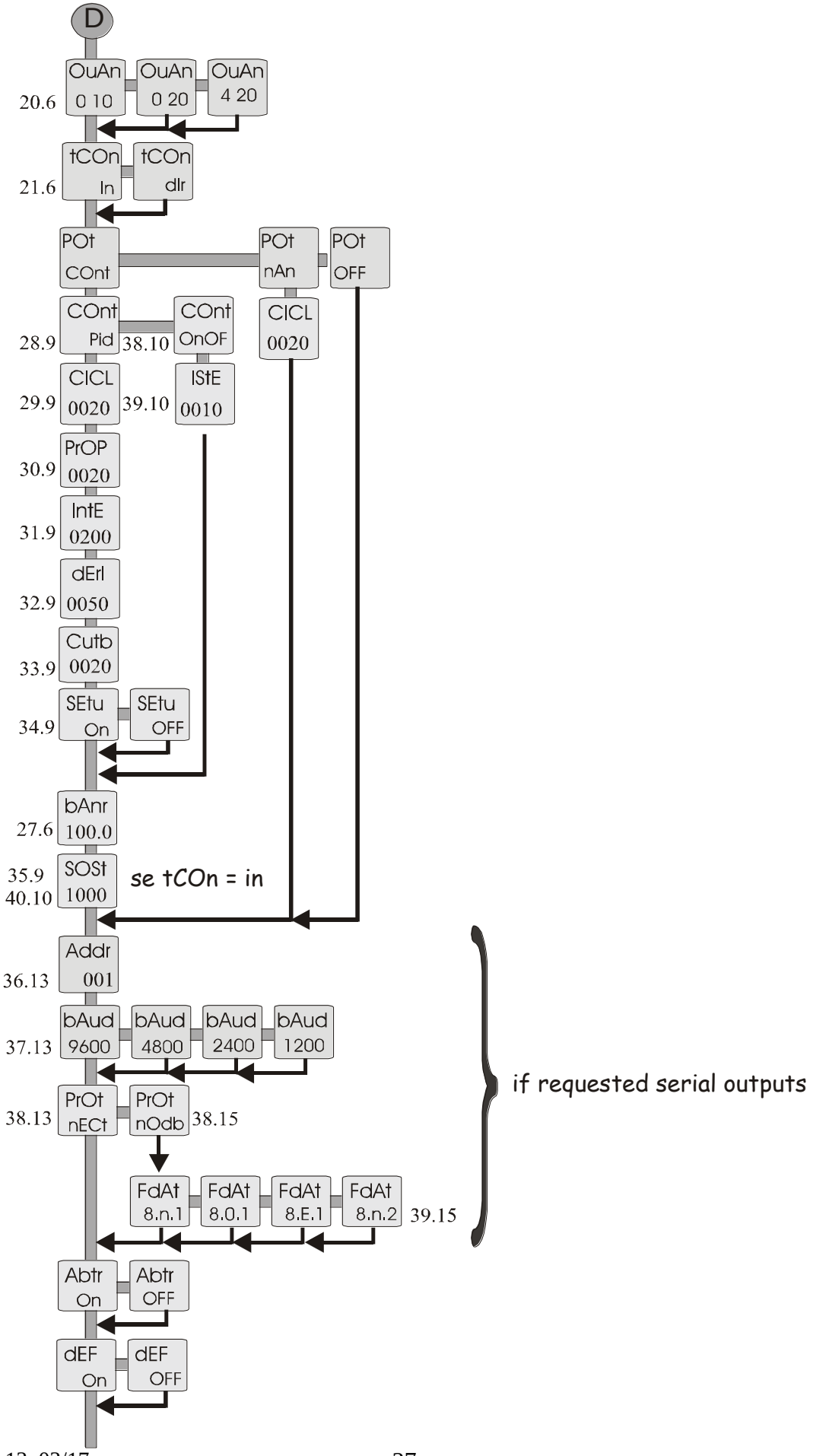
D
OuAn 0 10
OuAn 0 20
OuAn 4 20
20.6
tCOn In
tCOn dIr
21.6
POt COnt
POt nAn
POt OFF
COnt Pid
38.10
COnt OnOF
ClCL 0020
28.9
ClCL 0020
39.10
IStE 0010
29.9
PrOP 0020
30.9
IntE 0200
31.9
dErI 0050
32.9
Cutb 0020
33.9
SEtu On
SEtu OFF
34.9
bAnr 100.0
27.6
SOSt 1000
35.9
40.10
se tCOn = in
Addr 001
36.13
bAud 9600
bAud 4800
bAud 2400
bAud 1200
37.13
PrOt nECt
PrOt nOdb
38.13
38.15
FdAt 8.n.1
FdAt 8.0.1
FdAt 8.E.1
FdAt 8.n.2
39.15
if requested serial outputs
Abtr On
Abtr OFF
dEF On
dEF OFF

MPT91 M1

Table 6

ref.	touch key	appears on PV display	appears on SP display	NOTES	See Page
1	enter	PASS	0 000	In this phase the instrument asks for the Password in order to save the data already programmed. The number memorized by the factory is 0, but any number between 0 and 9999 can be memorized by writing where CPAS appears (next displayed item).	Pp 64
2	SP- ▸	PASS	0 0 00	Set Up Procedure. To digit the desired number touch the key " SP- ▸ " to move the flashing number to the right.	
3	SP+ ▲	PASS	0 1 00	Touch the key " SP+ ▲ " to increase the flashing number	
4	enter	CPAS	0 000	Number of the access key to the programming of the instrument. The number written in this phase will be requested at "PASS". To digit the number follow the procedure described in points 2 and 3.	Pp 64
5	enter	SCAL	°C	Temperature scale: Choose the type of scale required. Set the requested scale (°C or °F) by “SP+ ▲ ” and confirm with “enter“.	
6	enter	InP	PtE	Choose the type of sensor required. Touch the key “SP+ ▲ “ until "SP" display appears on the chosen input: FECO = Fe/CO (0 ÷ 600 °C) (J) CrAL = Cr/Al (0 ÷ 1200 °C) (K) PtPr = Pt/Pt-Rh (0 ÷ 1710°C) (S) PtE = PT100 (-40 ÷ 800 °C) Ptr = PT100 (- 40.0 ÷ 200.0 °C) 0 10 = analogue input 0-10V 0 20 = analogue input 0-20mA 4 20 = analogue input 4-20mA To change this item use the “SP+ ▲ “ key and confirm by “enter”	Pp 31
7	enter	PdEC	0.000	Decimal point for analogue input. Touch the key “SP+ ▲ “ to set the	

ref.	touch key	appears on PV display	appears on SP display	NOTES	See Page
				decimal point and confirm with "enter"	
8	enter	IS t	0000	Set the requested reading with the beginning of the analogue input. To digit the number see 2 and 3 paragraphs.	Pp 31
9	enter	FS t	1000	Set the requested reading with the full scale of the analogue input. To digit the number see 2 and 3 paragraphs.	Pp 31
10	enter	Out	OUAn	OUAn: analogue outputs for motorized valves. Set the requested regulation by “SP+▲” and confirm with “enter“.	
11	enter	LISP	0 000	Lower limit set-point. To digit the number follow the procedure described in points 2 and 3	Pp 31
12	enter	LSSP	0 000	Higher limit set-point. To digit the number follow the procedure described in points 2 and 3	Pp 31
13	enter	SPr	0 000	Setpoint remote value set up (if requested). To digit the number follow the procedure described in points 2 and 3	
14	enter	OFFS	0 000	Using the number "OFFS" it is possible to correct the displayed temperature by adding or subtracting a constant written in the display "PV". To digit the number follow the procedure described in points 2 and 3	
15	enter	SAL1	tEnP	Selection the kind of working Alarm1 tEnP = min or max absolute alarm value PEr = percentage alarm dELt = relative alarm at the set point SOGL = max absolute alarm value Press the key “SP+▲” to select and confirm with “enter”	Pp 32
16	enter	AbA1	On	Minimum alarm enable. On: Minimum alarm relay is always	Pp 32

ref.	touch key	appears on PV display	appears on SP display	NOTES	See Page
				enabled OFF: Minimum alarm relay is enabled after the first time the temperature reaches the alarm value To change this item use the “SP+▲ “ key and confirm by “enter”	
17	enter	AL1	0 000	Alarm value set up (if requested). To digit the value see steps 2 and 3. An alarm can work as minimum alarm (if < set-point) or maximum alarm (if > set-point).	Pp 32
18	enter	ISA1	001	Alarm 1 hysteresis set up	
19	enter	C A1	nA	Possibility of inverting the relay 1 function nA = normally open nC = normally closed Set the requested regulation by “SP+▲” and confirm with “enter“.	Pp 32
20	enter	SAL2	tEnP	Selection the kind of working Alarm 2 (Main Relay) tEnP = min or max absolute alarm value PEr = percentage alarm dELt = relative alarm at the set point SOGL = max absolute alarm value Press the key “SP+▲” to select and confirm with “enter”	Pp 32
21	enter	AbA2	On	Minimum alarm enable. On: Minimum alarm relay is always enabled OFF: Minimum alarm relay is enabled after the first time the temperature reaches the alarm value To change this item use the “SP+▲ “ key and confirm by “enter”	Pp 32
22	enter	AL2	0 000	Alarm value set up (if requested). To digit the value see steps 2 and 3. An alarm can work as minimum alarm (if < set-point) or maximum alarm (if > set-point).	Pp 32
23	enter	ISA2	001	Alarm 2 hysteresis set up	

ref.	touch key	appears on PV display	appears on SP display	NOTES	See Page
24	enter	C A2	nA	Possibility of inverting the main relay function nA = normally open nC = normally closed Set the requested regulation by “SP+▲” and confirm with “enter“."	Pp 32
25	enter	OUAn	0 10	If analogue output is requested touch the key "SP+▲" until the output required appears on the display and after confirm with "enter". 0 10 = output 0 ÷ 10 V 0 20 = output 0 ÷ 20 mA 4 20 = output 4 ÷ 20 mA	Pp 33
26	enter	tCOn	In	Control type: In = reverse function (main relay = heating) dIr = direct function for cooling function To change this item use the “SP+▲“ key and confirm by “enter”	
27	enter	bAnr	10.0	Touch “enter” the key until the item bAnr appears = cooling dead band (see paragraph)	Pp 35
	Ramp/ Exit	Read out	Set point		

2.5 SET POINT MODIFICATIONS +REMOTE SET-POINT (RSP OPTION)

Using the keys on the panel "SP+▲" and "SP-▶" it is possible to increase or decrease the number corresponding to the set point without having to use the programming menu. For a fast change keep pressed the key. In order to block the movement of the set point between two limits, programme the menu where "LISP" appears for the lower limit and "LSSP" for the upper limit.
If RSP option is requested, it is possible to set the second set-point, shortcircuiting 4 and 6 terminals. To set the second set-point use the item menu “SPr”. Also the second set-point is confined from "LISP" to "LSSP”. Using the remote set point, the Sp+▲ and Sp-▶ keys are disabled. The instrument works on the visualized set-point.

2.6 ANALOGUE INPUTS

The instruments of the "MPT91" series work with these analogue inputs:

- Current input “ 4 ÷ 20 mA “
- Current input “ 0 ÷ 20 mA “
- Voltage input “ 0 ÷ 10 V “

For each inputs it is possible to set any reading value in the range: -999 ÷ 2000.
To set these inputs the “ IS t “ and “ FS t “ items will be used for the beginning scale and full scale of the requested input. The programmed value could be corrected with “ OFFS “ item of the menu. With analogue inputs it is possible to set the decimal point by “PDEC” menu item. The voltage or current input must be linked to terminals number 2 (positive input) and 1 (gnd).

2.7 FUNCTION OFF-SET (OFFS)

If during the normal functioning of the thermoregulator you see a constant difference between the value measured by the sensor or analogue input and the real value, it is sufficient to write the difference in the "OFFS" function.
ATTENTION: the offset must be within -19.9 e 19.9 °C in the scale Pt r (-40.0 ÷ 200.0 °C) otherwise between -199 e 199 °C for all the other scales and is added to the temperature measured by the sensor.

2.8 SET UP AL1

The thermoregulator MPT91 offers the possibility to use one programmable alarm. This alarm can work with the following set up:

S.AL1 = tEnP. The alarm value (AL1) is set up with the absolute value. If AL1 < SP the alarm works when the temperature goes under the AL1 value (it can be enabled at the first switching on if AbA1 = on or after that the temperature has come to the alarm value for the first time if AbA1 = off); if AL1 > SP the alarm works when the temperature goes over the AL1 value.

S.AL1 = Per. The alarm value (AL1) is set up with the percentage value based on the set-point (from 0 to ± 100.0% of the set point). If AL1 is set up between –0.1% and –100.0% the alarm works when the temperature goes under the SP value – SP percentage (it can be enabled at the first switching on if AbA1 = on or after that the temperature has come to the alarm value for the first time if AbA1 = off); if AL1 is set up between +0.1% and +100.0% the alarm works when the temperature goes over the SP value + SP percentage.

S.AL1 = dELt. The alarm value (AL1) is set up in ºC offset about the set point. If AL1 is set up between –0 and – F.S. ºC the alarm works when the temperature goes under the SP value – set up offset (it can be enabled at the first switching on if AbA1 = on or after that the temperature has come to the alarm value for the first time if AbA1 = off); if AL1 is set up between + 0 and + F.S. ºC the alarm works when the temperature goes over the SP value + set up offset.

S.AL1 = SOGL. The alarm value is set up in absolute value between 0 and F.S. and the alarm works when the processing temperature goes over the AL1 set up temperature.

The alarm contact is configurable as “normally open” or as “normally closed” by the “CA1” item while the alarm relay hysteresis is programmable from 0 to F.S. value (digits/degrees) by the “ISA1” item.
The led on the frontal does not follow the contact programmation but it follows the alarm function.
The described functioning is active for alarm 1 just at the moment when “Out” = “rISC” or “Out” = “OUAn”. If “Out” = “rIrA” or “Out” = “UnOt” the alarm 1 respectively works for the cooling or for the servomotor function so the alarm 1 output changes the type of functioning depending on the requested regulation.
If “OUt” = “OUAn”, the main relay works as alarm 2.

3.0 ANALOGUE OUTPUT (option)

The thermoregulator MPT91 offers the possibility to supply the analogue outputs. The instrument is able to supply 3 types of outputs: “ 0 ÷ 20 mA “, “4÷ 20 mA “, “0÷ 10 V “ to transmit the read out or to control the motorized valves.

Table 7

Analogue outputs	0÷10 V - 0÷ 20 mA - 4÷20 mA
Max load for current output	300 Ω
Min load for voltage output	1KΩ
Max voltage output	10 V
Max current output	20 mA
Resolution	12 bits

3.1 ANALOGUE OUTPUT FOR MOTORIZED VALVE

To use analogue output for motorized valve it is necessary to set the voice “ Out “ = “ OUAn “ (see paragraph “ Instrument with a valve control”).
The analogue output is working as heating regulation if “tCOn” item = “In” or as cooling regulation if “tCOn” item = “dIr”. The analogue output can be selected in current (0/4 ÷ 20 mA: terminals 5 (+) and 4 -gnd-) or voltage (0 ÷ 10 V: terminals 6 (+) and 4 -gnd-). At the end of the cycle time (“CICL”) the analogue outputs are adjourned from the PID control.

3.2 ANALOGUE OUTPUT FOR READOUT

If the instrument has the analogue output and the voice “Out “ is selected as “rISC “, “rIrA “, or “UnOt “, the analogue output is proportional to the readout value.
The output can be selected in voltage or current mode. The terminals for voltage output are 6 (+) and 4 (gnd), while the terminals for current output are 5 (+) and 4 (gnd). The next table shows the couplings of the readout with the analogue outputs.

Table 8

ANALOGUE OUTPUT RANGE	BEGINNING SCALE OF ANALOGUE OUTPUT	FULL SCALE OF ANALOGUE OUTPUT
0÷10V for Pt r	0V ≡ -40.0 °C	10V ≡ 200,0 °C
0÷10V for Pt E	0V ≡ 0 °C	10V ≡ 800 °C
0÷10V for FE-CO	0V ≡ 0 °C	10V ≡ 600 °C
0÷10V for Cr-Al	0V ≡ 0 °C	10V ≡ 1200 °C
0÷10V for PtPr	0V ≡ 0 °C	10V ≡ 1710 °C
0÷10V for analogue input	0V ≡ IS t	10V ≡ FS t
0÷20 mA for Pt r	0 mA ≡ -40.0 °C	20 mA ≡ 200,0 °C
0÷20 mA for Pt E	0 mA ≡ 0 °C	20 mA ≡ 800 °C
0÷20 mA for FE-CO	0 mA ≡ 0 °C	20 mA ≡ 600 °C
0÷20 mA for Cr-Al	0 mA ≡ 0 °C	20 mA ≡ 1200 °C
0÷20 mA for PtPr	0 mA ≡ 0 °C	20 mA ≡ 1710 °C
0÷20mA for analogue input	0 mA ≡ IS t	20 mA ≡ FS t
4÷20 mA for Pt r	4 mA ≡ -40.0 °C	20 mA ≡ 200,0 °C
4÷20 mA for Pt E	4 mA ≡ 0 °C	20 mA ≡ 800 °C
4÷20 mA for FE-CO	4 mA ≡ 0 °C	20 mA ≡ 600 °C
4÷20 mA for Cr-Al	4 mA ≡ 0 °C	20 mA ≡ 1200 °C
4÷20 mA for PtPr	4 mA ≡ 0 °C	20 mA ≡ 1710 °C
4÷20 mA for analogue input	4 mA ≡ IS t	20 mA ≡ FS t

4.0 REGULATIONS - "CONT" function

The thermoregulator MPT91 allows the possibility to control the temperature in 3 different ways:

1. Automatic regulation (Pot = cont)
2. Manual regulation (Pot = man)
3. Disabled regulation (Pot = OFF)

In the first case (automatic control) the instrument works with ON-OFF or Pid controls (see PID TYPE REGULATION and ON-OFF TYPE REGULATION paragraphs).

In the second case (manual control) the instrument works with a value of power defined from the user. This value appears on SP display and it is possible to modify it by "SP+▲" and "SP-▶" items. Set on the menu the necessary cycle time.

In the third case (disabled control) the instrument disables all outputs and “OFF” appears on the SP display.

In the second and third cases it is not possible to use the ramp programs.

4.1 PID TYPE REGULATION

The PID regulation, if selected, allows the direct programming of the following keyboard parameters:

- - cycle time (CICL) 1÷200 sec

Attention: if the cycle time = 1÷200 sec only the static output works, if the cycle time = 10 ÷ 200 sec the static output works coupled with the main relay.

- - proportional band (ProP) 0 ÷ F.S. °C/°F
- - time req. for integrative action (IntE) 0 ÷ 6000 sec
- - time req. for derivative action (dErI) 0 ÷ 600 sec
- - constant Cutback (CUtb) 0 ÷ F.S. °C/°F

A quick way which guarantees correct operation is automatic parameter calculation by the machine itself using the "SELF-TUNING" function.
The enumerated parameters are valid for the heating control and for the cooling control too. If the instrument is used for a cooling control, a parameter is added and it defines the dead band (bAnr) in which is programmed the % of power under which the control is cancelled.

4.1.1 CUTBACK FUNCTION

With the function "CUTBACK" it is possible to reduce the temperature overshoot that can occur in certain processes. The number "Cutb" that can be programmed is expressed in °C/°F in the range 0÷F.S. of the chosen input. The insertion of this function avoids overshoot.
There are two methods to programme this function:
1) AUTOMATIC MODE: launch the self tuning command which calculates the constants P, I, D, and CUTBACK.
2) MANUAL MODE: Check manually how many degrees, during the first power on, are above the set-point (regulation made with parameters P - I - D - in line with the controlled thermal system). Write this data in the "CUTBACK" function. To exclude the function described it is sufficient to write "0" in "Cutb" menu item.

Table 9

ref.	touch key	appears on PV display	appears on SP display	NOTES	See page
1	enter	PASS	0 000	Number of Password	Pp 64
2	SP- ▸	PASS	0 0 00	Set Up Procedure. To input the desired number press the key " SP- ▸ " to move the flashing number to the right.	
3	SP+ ▲	PASS	0 1 00	Touch the key " SP+ ▲ " to increase the flashing number	
4	enter	CPAS	0 000	Number of the access key to the	

ref.	touch key	appears on PV display	appears on SP display	NOTES	See page
				programming of the instrument. The number written in this phase will be requested at "PASS". To digit the number follow the procedure described in points 2 and 3.	Pp 64
5	enter			Press the key "enter" until to reach the desired menu item "Cont"	
28	enter	Cont	Pid	Selecting Pid control the instrument will allow the following items	Pp 35
29	enter	CICL	0 000	Set up the cycle time required for the control. Under 10 sec. only the static output is guided, over 10 sec., the static output plus relay. To input the number follow the procedure described in points 2 and 3	
30	enter	ProP	0 000	Set up of the proportional band	
31	enter	IntE	0 000	Set up of the integrative constant	
32	enter	dErI	0 000	Set up of the derivative constant	
33	enter	CUtb	0 000	Set up of the temperature overshoot. For all these set ups follow the description of points 2 and 3	Pp 35
34	enter	SEtU	OFF	Function for the automatic calculation of the control constants "Pid". To insert this procedure press the “SP+▲ “ key until the written “on” appears.	Pp 36
27	enter	bAnr	0000	Cooling dead band. Only if Out = rIrA or Out = OUAn If you control Pid, put in the % of power under which the cooling control is cancelled.	
35	enter	SoSt	0 000	Set up of the temperature value under which the load becomes 30% guided. For all these set ups follow the description of points 2 and 3	Pp 39

4.1.2 SELF-TUNING FUNCTION (setu)

The self'-tuning function calculates the parameters of the Pid regulation (proportional band, integrative time, derivative time and CUTBACK function) to obtain a temperature control that is as precise as possible. The calculations of the self tuning function, if set-up in the programming phase, can be seen on the flashing "PV"

display. The calculation of the parameters consists of a heating cycle that the thermoregulator must follow with the working set point taking account of the thermal system installation. To use the self-tuning function it is necessary to remember that:

1. the self-tuning action can provoke an overshoot and depending on the thermal system used; the test can last from a few minutes to several hours.
2. eventual "soft-start" programming is not considered but comes into use at the end of self-tuning.
3. for a correct calculation of the parameters it is better from the users point of view to begin the self tuning procedure at room temperature and as far away as possible from the set point.
4. There exist certain conditions in which is not possible to finalize the parameter calculations. In these situations the instrument blocks the "self-tuning" action and displays an error code that defines the type of anomaly found:
   a) temperature >= at set-point (Err 1)
   b) sensor interrupted or over range condition (Err 2)
   c) set-point too closed to initial temperature (Err 4)

   In these conditions the instrument follows the abort function, showing on the "PV" display the message relating to the displayed error and deactivating the actuators. The instrument will work again only when the operator press the "enter" key and corrects the anomaly.
5. The self tuning function is, however, annullable at any moment, it being sufficient to touch "enter", inserting the password number and when the "abort" signal appears, press the "SP+▲" key to make "on" appear and then confirm with "enter".
6. After the self tuning phase it is necessary, to set up the cycle time (if the programming control = "PID" and cycle time = 0 the instrument works like a thermometer).
7. After the self tuning phase it is necessary, to set up the cycle time (if the programming control = "PID" and cycle time = 0 the instrument works like a thermometer).

4.2 ON-OFF TYPE REGULATION

The ON-OFF regulation, if selected, allows hysteresis programming. The hysteresis must be set up in "degrees" relative to the set-point and the variation should be symmetric in relation to the desired temperature.

EXAMPLE: set-point = 300 °C
IStE = 10 °C

the main working relay (RL 1) is on until 310 °C, and it will be on again at 290 °C.

You can set up the values in degrees from 1 (0,1 for the Ptr scale) to F.S. as requested.

The On-OFF control, with heating-cooling regulation, inserts a new item to define a dead band (bAnr). The functioning of this control is described in the following figure.

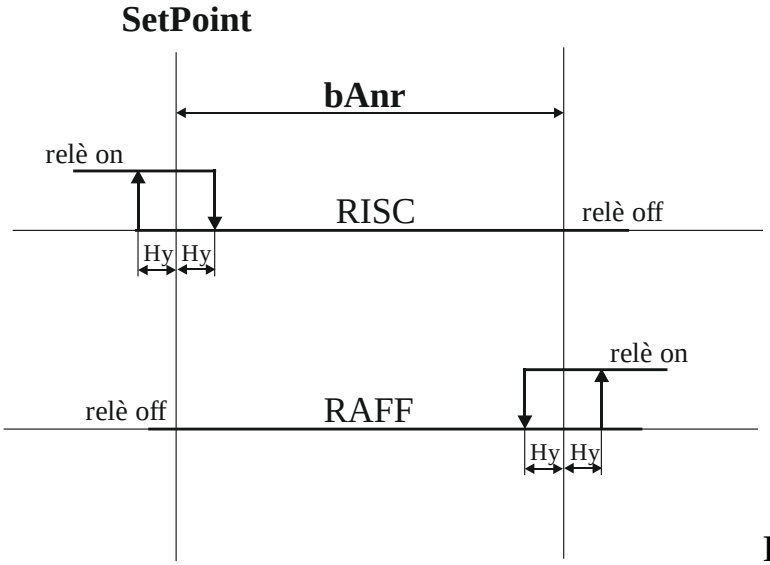

Figure 1

Table 10

ref.	touch key	appears on PV display	appears on SP display	NOTES	See Page
1	enter	PASS	0 000	Number of Password	Pp 64
2	enter	CPAS	0 000	Number of the access key to the programming of the instrument. The number written in this phase will be requested at "PASS	Pp 64
3	enter			Press the "enter" key until to reach the desired "Cont" menu item	
38	enter	COnt	OnOF	Selecting On-OFF control the instrument will allow the following items	Pp 37
39	enter	IStE	0003	Set up hysteresis.	
27	enter	bAnr	0000	Cooling dead band. Only if OUt = rIrA or OUt = OUAn. If you have an On-Off control put the band in °C in which will be inhibited the heating and cooling control.	
40	enter	SoSt	0 000	Set up the temperature value under which the load becomes 30% guided	Pp 39
	Ramp/ exit	Read out	Set point		

4.3 SOFT-START FUNCTION (sost)

The function soft-start guarantees a "cold" departure of the thermoregulator with a command of the heating elements not above 30% of maximum power, in the range of temperature set up at the "SOSt" command. The value, which can be programmed, is between 0÷F.S. °C/°F, and as a consequence, a higher initial temperature automatically excludes the function. After having set up this system please put off and then start up again the instrument to set working this function.
Also with the "On-Off" regulation it is possible to use the "soft-start" option; this is used with a fixed cycle time of 10 sec.
If the type of control is set up in direct function ("tcon = dir") the soft start function is not available.
After setting up the programme, the soft-start function is, however, annullable at any moment, it being sufficient to press "enter", inserting the password number and when the "abort" signal appears, press the "SP+▲" key to make "on" appear and then confirm with " enter ".
The soft-start function, if set up, is shown by both "PV" ed "SP" flashing on the display.

5.0 RAMP SET UP

The MPT91 instrument can execute automatic cycles with steps. The ramp set up allows the automatic set point variation while the base regulator functions are programmed in the main menu (see "installation notes"). It is possible to set up 3 programs of 8 steps each (linking together). For each step it is defined the final temperature and its duration up to 99 hours and 99 minutes.
It's not possible to set up the first step of each program with zero duration**.**
The "Pot" menu item set up is not available when ramps are working.
There are some available options:

RIPR: program repetition. Selecting this item at "on" you qualify the selected programs to be repeated to infinity. This selection excludes the following "COFR" (ramp control at last step).

COFR: ramp control at last step. This menu's item can be selected in "STOP", if is requested that the thermoregulator**,** ended the programmed cycle, turns off the load, or can be selected in "REG", if is requested that the thermoregulator**,** ended the programmed cycle, controls with last set-point.

DESP: delay starting program. This menu's item allows to set up a delay time at the beginning of the selected programs. The maximum time that can be set up is 99 hours and 99 minutes. During the delay time the instrument presents the flashing led R**.** Pressing the "Ramp/Exit" + "enter" keys the instrument resets the actual time delay and immediately enables the ramp to execute. To read the residual delay time you must press the **"**SP+▲**"** key .

In this case you can read on the displays PV and SP the following information:

trES (residual time)
01.23 (1 hour and 23 minutes)

5.1 KEY FUNCTIONS

"Ramp/Exit" key: access to the "Ramps' programs". The "ramp/Exit" key can be disabled by the menu item "Abtr".
Attention: it is not possible to change the current step.

"Ramp/Exit" key : to get out of the menu is sufficient to press the "Ramp/Exit" key; the instrument goes in process saving the set ups executed till then.

"Ramp/Exit" + "enter" keys: during a ramp program, if the "Ramp/Exit" + "Enter" keys are pressed (STOP function), the instrument turns off the heating and, the SP display and the led on blink. When you press the "Ramp/Exit" + "enter" keys a second time, the instrument starts again the execution of the program from where it had been suspended.

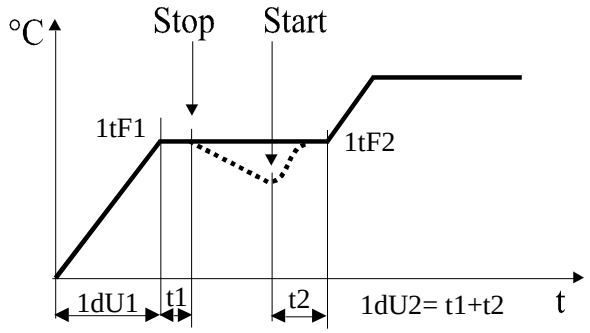

Figure 2

5.2 DIAGRAM RAMP MENU

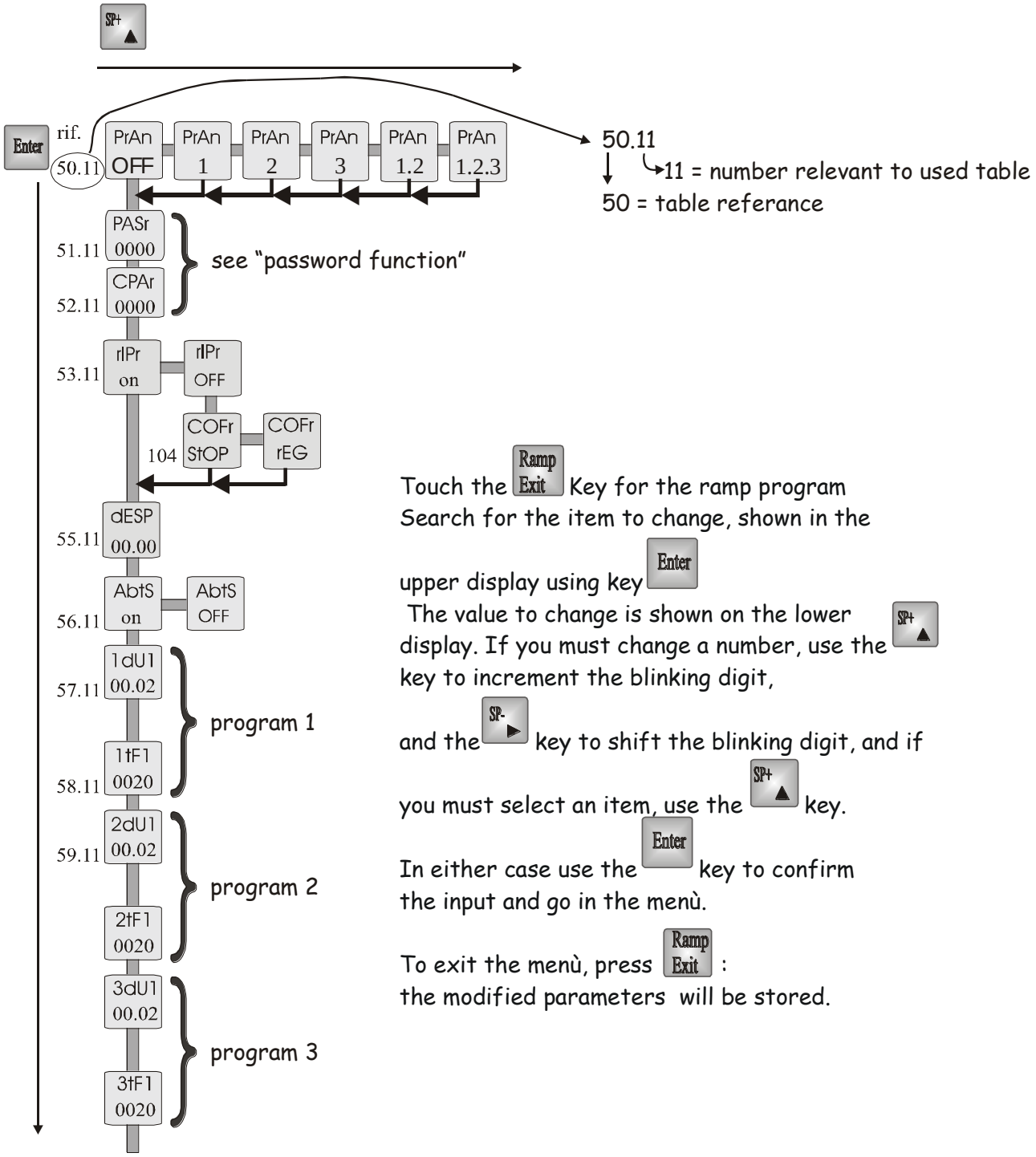

Touch the Ramp Exit Key for the ramp program
Search for the item to change, shown in the upper display using key Enter
The value to change is shown on the lower display. If you must change a number, use the SP+ key to increment the blinking digit, and the SP- key to shift the blinking digit, and if you must select an item, use the SP+ key.
In either case use the Enter key to confirm the input and go in the menù.
To exit the menù, press Ramp Exit :
the modified parameters will be stored.

Table 11

ref.	touch key	appears on PV display	appears on SP display	NOTES
50	Ramp/ Exit	PrAn	OFF	Program number: **OFF:** no program **1**: program n°1 **2**: program n°2 **3**: program n°3 **1.2:** program n°1 + n°2 **1.2.3:** program n°1 + n°2 + n°3 To change this set up press the "SP+▲" key and confirm with "enter"
51	enter	PASr	0000	Password number for ramp program
52	enter	CPAr	0000	Password change for ramp program
53	enter	rIPr	OFF	Repetition selected programs **OFF:** executes only one time the selected programs **On:** repeats to infinity the selected programs To change this set up press the "SP+▲" key and confirm with "enter"
54	enter	COFr	StOP	Ramp control at last step (only if rIPr = OFF) **StOP:** ended the set up program the instrument goes in stop **rEG:** ended the set up program the instrument controls on last set point. To change this set up press the "SP+▲" key and confirm with "enter"
55	enter	dESP	02.00	Delay time before to start the program. Set up the time in hours and minutes relative at the requested delay pressing the "SP+▲" + "SP-▶"keys
56	enter	AbtS	OFF	Enabling "Ramp/Exit" +"enter" keys: **OFF:** disabled keys **On:** enabled keys To change this set up press the "SP+▲" key and confirm with "enter"
57	enter	1dU1	00.30	Program n°1, step n°1 duration. Input time in hours and minutes for the step using "SP+▲ " and "SP-▶"keys. Attention: it is not possible to set at zero the first duration.

ref.	touch key	appears on PV display	appears on SP display	NOTES
58	enter	1tF1	0020	Program n°1, final temperature for step n°1. Input the desired temperature using the "SP+▲" key to increase the blinking digit and the "SP-▶" key to shift the blinking digit
59	enter	1dU2	00.50	The program set up goes on with the set up of the second step of the first program. At the end of the 8th step the menu shows the 8 steps of the second program and then the 8 steps of the third program.

The instrument performs the program selected in the PrAn item of the menu (if PrAn=OFF the instrument works normally). The program starts with the first step. At the end of the program and if rIPr=OFF the instrument shuts down the heating control, the last set point will flash together with the led "on" if COFr=StOP or, vice versa the instrument controls on last set-point if COFr=rEG.
If rIPr=On the instrument starts again from the beginning and repeats to infinity the selected programs. If COFr=StOP at the end of selected program we have a "STOP" function and the instrument shuts down the control and the SP display and led "on" flash. The "STOP" function of the end of the program is also memorized at power off condition.
After a "STOP" condition caused by the end of the program, the instrument will work again if one of the following conditions happen:

1. no ramp program set up (PrAn=OFF). The instrument controls on last set-point.
2. new ramp program. Selecting in "PrAn" item one available programs, the instrument goes on execution starting from the first programmed step with the same initial measured temperature at that time.
3. with "Ramp/Exit" + "Enter" keys press together the instrument starts again from the ramp program that were in execution, starting from the first programmed step with the same initial measured temperature at that time.

When a step program is in progress, the upper (PV) display shows the process temperature, and the lower (SP) display shows the dynamic set point of the regulator. Besides the led "R" is always "on" for the duration of the chosen program.
While the step program is running, it is possible to see the residual time of the step in progress and its final temperature by pressing the "SP+▲" key: the information will be displayed as:

trES (residual time)
01.23 (1 hour and 23 minutes)

tFin (final temperature)
0100 (100 °C)

At the end of the current step, if the temperature is not within 3 grades respect to the computed set point, the regulator waits for this condition before executing the next step.

After a “STOP” because “Ramp/Exit” + “Enter” keys are pressed, the instrument shuts down the control and SP display and led “on” flash. The STOP function is also memorized at the power off of the instrument. The instrument after a STOP phase will work again if one of the following conditions happen:

1 no ramp program set up (PrAn=OFF). The instrument controls on last set-point.
2 new ramp program. Selecting in “PrAM” item one available programs, the instrument goes on execution starting from the first programmed step with the same initial measured temperature at that time.
3 with “Ramp/Exit” + “Enter” keys press together: the instrument controls on suspended ramp (see fig. 2). A ramp is considered finished if the temperature is within ± 3° of the final programmed temperature.

If during the functioning the instrument is powered off, the current step is stored and at the next power on this stored step is reload. If the temperature, during power off, exits from the range of the stored step, at the power on the instrument will continue as shown in the figures 3, 4, 5, 6.

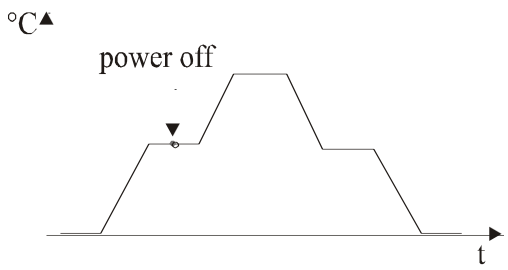

Figure 3

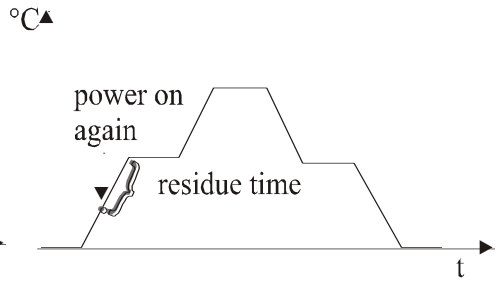

Figure 4

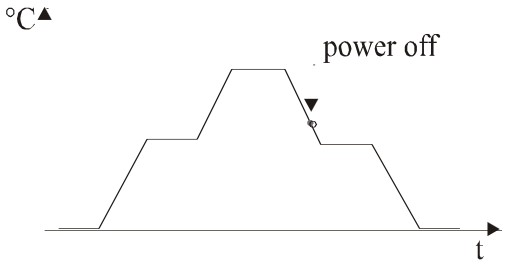

Figure 5

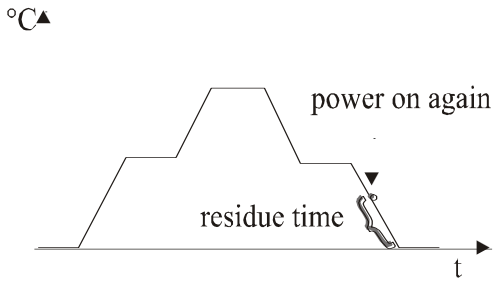

Figure 6

6.0 SERIAL OUTPUT

MPT91 models can communicate with an host computer along a standard or optoisolated RS232, RS422, RS485 serial using “mect” or “MODBUS” protocols (see paragraph 7.0).

Bi-directional serial output

By the serial output it is possible to read out and write all parameters of the instrument. It is possible to connect up to 31 instruments (with RS485). All messages are sent and received by the serial output by an ASCII protocol.

Table 12

SERIAL CHARACTERISTICS	
Baud rate	9600 4800 2400 1200 (programmable by the keyboard)
Start bit	1 bit
Length	8 bit
Stop	1 bit
Parity	No

The MPT91 model with RS232 the wiring diagram is shown in fig A. The MPT91 model with RS422 or RS485 the wiring diagram is shown in fig B. To program the address and the baud rate see the following table.

Table 13

ref.	touch key	appears on PV display	appears on Sp display	NOTES	See page
1	enter			Press the ”enter” key to get into the programming menu	
2	enter	PASS	0 000	Digit the password number	Pp 64
3	enter	PASS	0 0 00	Change the Password number and confirm with “enter”	
4	enter			Press the “enter” key until you see the “Addr” message on the “PV” display	
36	enter	Addr	0 000	Write the address code	Pp 45
37	enter	bAUd	9600	Press the “SP+▲” key until you see the right baud rate (1200, 2400, 4800 o 9600). Confirm by “enter”	Pp 45
38	enter	PrOt	nECt	Press the “SP+▲” key until you see “nECt” item. Confirm by “enter”. nECt = “mect” protocol nOdb = MODBUS protocol	

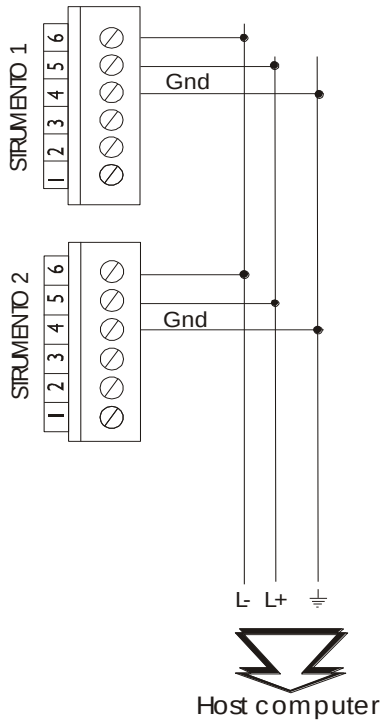

Figure A

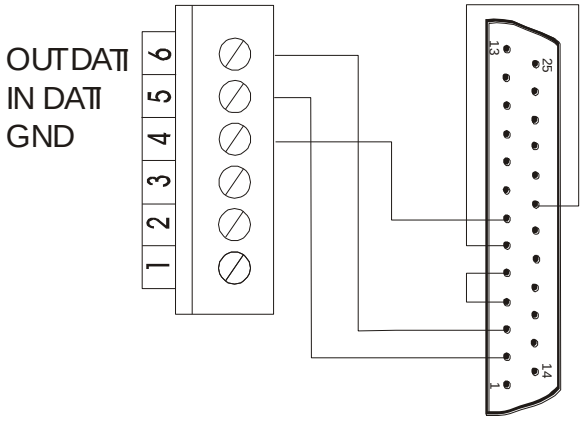

Figure B

6.1 DATA READING FROM HOST TO INSTRUMENT MPT91

Transmission string set-up.

EOT GID GID UID UID C1 C2 ENQ

EOT = EOT from host indicates the start of transmission string
GID = ASCII code for the tenths of the instrument address to transmit twice consecutively
UID = ASCII code for the units of the instrument address to transmit twice consecutively
C1 C2 = mnemonic ASCII code for command to execute. (see paragraph "COMMAND CODES")

EXAMPLE: data transmission string from host to MPT91 with address "01" for data request **"Reading scale end" (SP).(controllare)**

EOT	0	0	1	1	S	P	ENQ	
04	30	30	31	31	53	50	05	cod. ASCII

The instrument, from the moment in which it receives the first string code transmitted by the host, leaves 400 ms. during which it waits for the end of the transmission operation. When the 400 ms. operation finishes, or when the data reception is completed, the instrument, depending on the information received, can behave in the

following four ways:

1) If the data string received presents errors which do not allow address identification then the instrument cannot reply and rejects the information received.
2) The string has a correct address code but it detects other errors; in this case the instrument transmits the ASCII code: NACK (not understood) and rejects the information received.
3) The received data string is totally completed, in this case the instrument transmits the data requested in ASCII format (see paragraph "DATA TRANSMISSION FROM MPT91 TO HOST").
4) When the complete message is not received before "timeout" (400 mSec), the instrument rejects the information received and it is ready to receive a new message.

6.2 DATA TRANSMISSION FROM MPT91 TO HOST

Transmission string configuration

STX C1 C2 D1 . . . . D6 ETX BCC

STX = start of text
C1 C2 = mnemonic code ASCII relative to command to execute (see paragraph "COMMAND CODES")
D1 ÷D6 = Numbers displayed, including negative sign, ">", decimal points (if it is present) and blank or zero for not significant digits (the transmitted digits must always be 6)

ATTENTION: the data must always be "supported" on the right and in any case the significant numbers cannot be more than five. In the case of positive numbers the sign "+" must not be transmitted.

EXAMPLE: the number -5.6 can be written in two ways

1)	blank	blank	-	5	.	6
	20	20	2D	35	2E	36
2)	-	0	0	5	.	6
	2D	30	30	35	2E	36

ETX = End of text
BCC = Checksum, obtained using EXCLUSIVE OR, of the transmitted string excluding the code "STX" comprising "ETX" in the indicated order.

BCC = C1 + C2 + D1 + D2 + D3 + D4 + D5 + D6 + ETX

EXAMPLE: data string from MPT91 to host in response to example above.

STX	S	P	blank	blank	0	1	0	0	ETX	BC	
02	53	50	20	20	30	31	30	30	03	01	cod.ascii

The MPT91 after having transmitted the string with the data requested from the host-computer waits the reply confirming the result of the transmission executed.

1) The host-computer replies in ASCII: NACK (not understood). The MPT91 transmits again the data string.
2) The host-computer does not reply. In this case the instrument waits the next EOT on the network to set up the next communication.
3) The host-computer replies in ASCII: ACK (understood). The instrument waits new commands.

6.3 DATA WRITING FROM HOST TO MPT91

Set up of transmission string

EOT GID GID UID UID STX C1 C2 D1 . . . D6 ETX BCC

EOT = EOT from host indicates the start of transmission string
GID = ASCII code for the tenths of the instrument address to transmit twice consecutively
UID = ASCII code for the units of the instrument address to transmit twice consecutively
C1 C2 = mnemonic ASCII code for command to execute (see paragraph "COMMAND CODES")
D1 ÷ D6 = Digits displayed. The same rules are valid as those described in the paragraph " data transmission from MPT91 to host"
BCC = Checksum, obtained using EXCLUSIVE OR, of the transmitted string excluding the code "STX" comprising "ETX" in the order indicated

BCC = C1 + C2 + D1 + D2 + D3 + D4 + D5 + D6 + ETX

EXAMPLE: string for writing data from host to MPT91 with "01". address.

EOT	0	0	1	1	STX	S	P	blank	blank	0	1	0	0	ETX	BCC
04	30	30	31	31	02	53	50	20	20	30	31	30	30	03	08

The instrument, from the moment in which it receives the first code of the data string transmitted by the host, makes to start 400 ms during which it waits for the transmission operation to be completed. When the 400 ms. operation finishes, or when the data reception is completed, the instrument, depending on the information received, can behave in four different ways:

1) If the data string received presents errors which do not allow address identification then the instrument cannot reply and rejects the information received.

2) The string has a correct address code but detects other errors; in this case the instrument transmits the ASCII code: NACK (not understood) and rejects the information received.
3) The received data string is totally completed, in which case the instrument writes the information memorized and transmits the code ASCII=ACK (understood)
4) When the complete message is not received before "timeout" (400 ms), the instrument rejects the information received and is ready to receive a new message.

6.4 COMMAND CODES

The codes of the variables used for the MPT91 instrument programming, are listed into the following table". Not all the parameters allow the writing from host, in this case the instrument does not work and replies "NACK".

Table 14

COMMAND CODES	COMMAND DESCRIPTION	ALLOWED SET-UP	TYPE OF CODE
SC	Scale (SCAL)	read/write	hexadecimal 0 = °C 1 = °F
OU	Output (OUt)	read/write	hexadecimal 0 = RISC 1 = RIRA 2 = VMOT 3 = OA
CO	Control (Cont)	read/write	hexadecimal 0 = on-off 1 = Pid
IN	Input	read/write	hexadecimal 0 = Fe/Co 1 = Cr/AL 2 = Pt/Pt-Rh 3 = PT100E: 0÷800°C 4 = PT100r:-40.0÷200,0°C 5 = 0 ÷ 10V 6 = 0 ÷ 20 mA 7 = 4 ÷ 20 mA
OA	Selection analogue outputs	read/write	hexadecimal 0 = 0.10 (V) 1 = 0.20 (mA) 2 = 4.20 (mA)
PD	Decimal point	read/write	hexadecimal

COMMAND CODES	COMMAND DESCRIPTION	ALLOWED SET-UP	TYPE OF CODE
			0 = no point 1 = 199.9 2 = 19.99 3 = 1.999
IT	Beginning scale (IS T)	read/write	ASCII -200÷2000
FT	End of scale (FS T)	read/write	ASCII -200÷2000
B1	Alarm 1 enable (ABA1)	read/write	hexadecimal 0 = off 1 = on
CI	Cycle (CICL)	read/write	ASCII 0÷200
OF	Offset (OFFS)	read/write	ASCII 0÷F.S.
A1	Alarm 1 (AL1)	read/write	ASCII 0÷F.S.
C1	Relay function Al. 1 (C A1)	read/write	hexadecimal 0 = normally open 1 = normally closed
I1	Hy AL1 (ISA1)	read/write	ASCII 0÷F.S.
T1	Selection alarm 1	read/write	hexadecimal 0 = tEMP 1 = dELt 2 = Per 3 = SOGL
TV	Valve time	read/write	ASCII 0÷999.9
BM	Dead band	read/write	ASCII 0÷100.0
BR	Cooling dead band	read/write	ASCII 0÷100.0
KP	Proportional band (PrOP)	read/write	ASCII 0÷F.S.
KI	Integrative action (IntE)	read/write	ASCII 0÷6000s
KD	Derivative action(dErI)	read/write	ASCII 0÷600s
SP	Set-point	read/write	ASCII 0 ÷ F.S.
S2	Remote set-point	read/write	ASCII 0 ÷ F.S.
LI	Lower limit set-point (LISP)	read/write	ASCII 0 ÷ F.S.
LS	Upper limit set-point (LSSP)	read/write	ASCII 0 ÷ F.S.
SS	Soft-start (SOSt)	read/write	ASCII 0÷100°C/°F
CB	Cutback (cutb)	read/write	ASCII 0÷F.S.

MPT91 M1

COMMAND CODES	COMMAND DESCRIPTION	ALLOWED SET-UP	TYPE OF CODE
TE	Read out	only read	ASCII 0 ÷ F.S.
IS	Hysteresis (Hy)	read/write	ASCII 0÷F.S.
SW	Status word	read/write	Hexadecimal (see paragr.)
SR	Start/stop ramp	read/write	hexadecimal 0 = ramp on 1= ramp in stop
PR	Program ramp	read/write	hexadecimal 0=OFF 1=1 2=2 3=3 4=1+2 5=1+2+3
FR	End of ramp control (COFR)	read/write	hexadecimal 0 = OFF 1 = REG
TR	Disabled ramp key	read/write	hexadecimal 0 = OFF 1 = On
RP	Program repetition (RIPR)	read/write	hexadecimal 0 = OFF 1 = On
IP	Delay starting program	read/write	ASCII HH.MM
RX	Modify ramp parameters	read/write	ASCII 1÷3
X1-X8	Time step	read/write	ASCII (see paragraph)
Y1-Y8	Final temperature	read/write	ASCII (see paragraph)
PP	% of power	Only read	ASCII –100 ÷ +100
TC	Control type	read/write	hexadecimal 0 = reverse 1 = direct
PO	Power	read/write	0 = automatic regulation 1 = manual regulation 2 = disabled regulation
PM	Manual power	read/write	ASCII –100.0 ÷ +100.0

6.5 STATUS WORD

The status word must be transmitted in a 4 digit hexadecimal format.

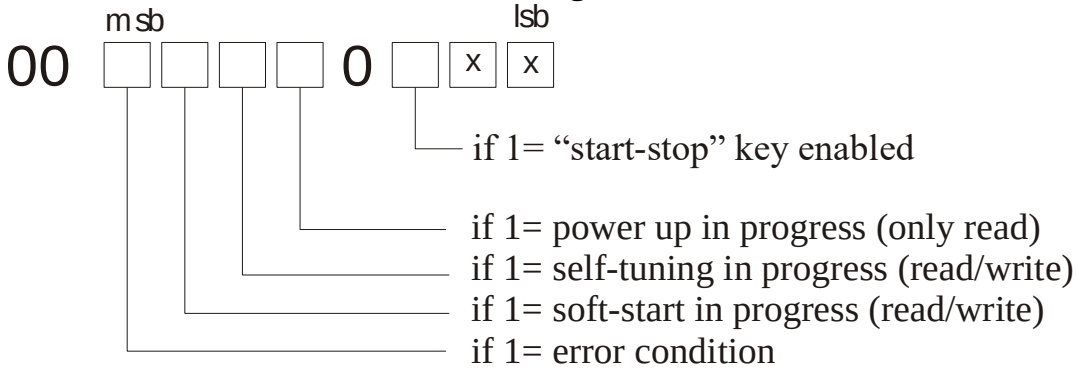

6.6 TRASMISSION OF HEXADECIMAL VALUES

Some values must be transmitted in a 4 digit hexadecimal format. In that case the protocol string must be preceded by the ASCII character ">".
EXAMPLE: for CONT=PID the data will be: blank >0001

EXAMPLE OF READING STATUS WORD

HOST:

EOT	0	0	1	1	S	W	ENQ
04	30	30	31	31	53	57	05

MPT INSTRUMENT:

STX	S	W	blank	>	0	0	0	4	ETX	BCC
02	53	57	20	3E	30	30	30	34	03	1D

EXAMPLE OF WRITING STATUS WORD

(self-tuning in progress)

HOST:

EOT	0	0	1	1	STX	S	W	blank	>	0	0	2	0	ETX	BCC
04	30	30	31	31	02	53	57	20	3E	30	30	32	30	03	1B

MPT instrument:

ACK
06

6.7 RAMP PROGRAMMING WITH SERIAL LINE

To program ramp functions with serial line, follow this procedure.
Transmit from host the code RX followed by the ramp number to program.
Transmit from host the code X1, X2, X3, …, X8 to program the duration of the steps of the selected program.
Transmit from host the code Y1, Y2, Y3, …, Y8 to program the final temperature of the steps of the selected program.

6.8 AN EXAMPLE IN BASIC LANGUAGE

Here you can see an example of a program in Basic to read the readout of the instrument with a serial line. Program the instrument with address = 01, baud rate = 9600.

```
on error goto 20
cls
open “com1: 9600, n, 8, 1” for random as #1
print #1, chr$(4) + “0” + “0” + “1” + “1” + “S” + “P” + chr$(5)
print “waiting for answer …”
cls
a$ = input$(11, #1)
b$ = mid $(a$, 4, 7)
print
print “readout: “;b$
end
20 print “nothing received”
resume
```

7.0 SERIAL OUTPUT (option) with MODBUS protocol

Program the instrument as shown in the following table and use the next connection diagram.

Table 15

ref.	touch key	appears on PV display	appears on Sp display	NOTES	See page
1	enter			Press the ”enter” key to get into the programming menu	
2	enter	PASS	0 000	write the Password number	Pp 64
3		PASS	0 0 00	Change the password number and confirm with “enter”	
4	enter			Press the “enter” key until you see the “Addr” message on the “PV” display	
5	enter	Addr	0 000	Write the address code	Pp 45
6	enter	bAUd	9600	Press the “SP+▲” key until you see the right speed (1200, 2400, 4800 o 9600). Confirm with “enter”.	Pp 45
7	enter	PrOt	nOdb	Press the “SP+▲” key until you see the “nOdb” item. Confirm by “enter”. nECt = “mect” protocol	

ref.	touch key	appears on PV display	appears on Sp display	NOTES	See page
				nOdb = MODBUS protocol	
8	enter	FdAt	8n1	Selected the requested item with "SP+▲" key and confirm with "enter": 8.n.1.: 8 bit given, no parity, 1 stop bit 8.O.1.: 8 bit given, odd parity, 1 stop bit 8.E.1.: 8 bit given, even parity, 1 stop bit 8.n.2.: 8 bit given, no parity, 2 stop bit	

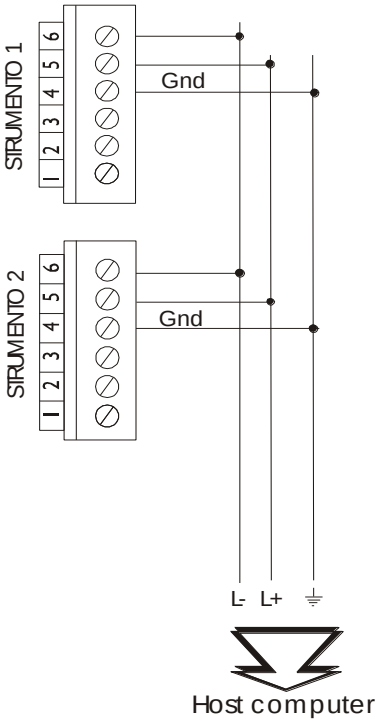

7.1 READ OUTPUT STATUS (01)

This function allows to request ON or OFF status of binary values

REQUEST

Besides the use of the slave address and of the function code (01), the message contains the starting address (two bytes long) and the number of bits to read (two bytes long). The addresses' numeration starts from zero (bit1 = 0)for the MODBUS.

Example: bit from 0004 to 0015 reading request from slave 17.

ADDR	FUNC	DATA Start Addr HI	DATA Start Addr LO	DATA Bit # HI	DATA Bit # LO	CRC LO	CRC HI
11	01	00	03	00	0C	CE	9F

Answer

Besides the slave's address and the function code (01) the message comprehend a byte which contains the data's number of bytes and the bytes which contain the data. The data are packed, in this way a byte contains 8 bit, the less significant bit of the first byte contains the bit corresponding at the starting Address, and so on. If the number of bit to read is not a 8 multiple, the last byte is filled with zeroes into the more significant bits.

Example: Answer to the above request.

ADDR	FUNC	DATA Byte Count	DATA Bit 04..11	DATA Bit 12..15	CRC LO	CRC HI
11	01	02	CD	0B	6D	68

7.2 READ INPUT STATUS (02)

This function is operatively the same of the function above.

7.3 READ OUTPUT REGISTERS (03)

This function allows to request the value of the 16 bit (word) registers which contains numeric variables.

REQUEST

Beside the **slave**'s address and the function code (03), the message contains the starting Address expressed on two bytes and the number of word to read on the two bytes. The maximum number of word which can be read is 125. The numeration of the addresses starts from zero (word1=0) for the MODBUS.

Example: Reading request from the slave 25 of the registers from 069 to 0071.

ADDR	FUNC	DATA Start Addr HI	DATA Start Addr LO	DATA bword# HI	DATA word# LO	CRC LO	CRC HI
19	03	00	44	00	03	46	06

Answer

Besides the slave's address and the function code (03) the message comprehend a byte which contains the data's number of bytes and the bytes which contain the data. The registers need two bytes each, the first one contains the most significant byte.

Example: Answer at the request above.

ADDR	FUNC	DATA Byte Count	DATA Word 69 HI	DATA Word 69 LO	DATA Word 70 HI	DATA Word 70 LO	DATA Word 71 HI	DATA Word 71 LO	CRC LO	CRC HI
19	03	06	02	2B	00	00	00	64	AF	7A

7.4 READ INPUT REGISTERS (04)

This function is operatively the same of the function above.

7.5 FORCE SINGLE COIL (05)

This function allows to force a single binary variable ON or OFF.

REQUEST

Beside the slave's address and the function code (05) the message contains the address of the variable to force on two bytes and two bytes the first one is at FFh (255) to force the ON status and 00h to force OFF, the second one is always at zero. The numeration of the addresses starts from zero (bit1 = 0) for the MODBUS.

Example: Request to force ON on the slave number 47 the bit 4.

ADDR	FUNC	DATA Bit # HI	DATA Bit # LO	DATA ON/OFF	DATA (zero)	CRC LO	CRC HI
2F	05	00	03	FF	00	7A	74

Answer

The answer is to transmit again the received message after the variable has been modified.

Example: Answer at the request above.

ADDR	FUNC	DATA Bit # HI	DATA Bit # LO	DATA ON/OFF	DATA (zero)	CRC LO	CRC HI
2F	05	00	03	FF	00	7A	74

7.6 PRESET SINGLE REGISTER (06)

This function allows to set the value of a single 16 bit register.

REQUEST

Beside the slave's address and the function code (06) the message contains the variable's address expressed on two bytes and the value to be stored. The numeration of the addresses starts from zero (word1 = 0) for the MODBUS.

Example: Request to force 926 on the slave number 38 at the address number 26.

ADDR	FUNC	DATA Bit # HI	DATA Bit # LO	DATA WORD HI	DATA WORD LO	CRC LO	CRC HI
26	06	00	19	03	9E	DF	82

Answer

The answer is to transmit again the received message after the variable has been modified.

Example: Answer at the request above.

ADDR	FUNC	DATA Bit # HI	DATA Bit # LO	DATA WORD HI	DATA WORD LO	CRC LO	CRC HI
26	06	00	19	03	9E	DF	82

7.7 READ STATUS (07)

This function allows to read the status of 8 fixed bit with a compact message.

REQUEST

The message contains only the slave's address and the function code (07).
Example: Slave 25's status request.

ADDR	FUNC	CRC LO	CRC HI
19	07	4B	E2

Answer

Beside the slave's address and the function code (07) the message contains a byte which contains the status bits.

Status byte

IND.	**FUNCTION**
Bit 0	Or of instrument alarms
Bit 1	Self tuning on
Bit 2	Soft start on
Bit 3	Ramp in progress
Bit 4	Maintenance ramp
Bit 5	Delay ramp on
Bit 6	
Bit 7	Out of scale alarm

Example: Answer at the request above

ADDR	FUNC	DATA Status byte	CRC LO	CRC HI
19	07	6D	63	DA

7.8 FORCE MULTIPLE COILS (15)

This function allows to force any binary variables' status in contiguous block.

REQUEST

Beside the slave address and the function code (15) the message contains the starting address expressed on two bytes, the number of bits to write, the number of byte which contains the data and the bytes of data. The data are packed, so a byte contains 8 bit status, the bit less significant of the first byte must contain the bit which correspond to the starting address and so on. If the number of bits to write is not a 8 multiple, the last type must be filled with zeroes into the more significant bits. The numeration of the addresses start from zero (bit1 = 0) for the MODBUS.

Example: Request to force, on slave 12, 4 bits from the address 1. I bit 1 and 4 forced to "1", the other to "0".

ADDR	FUNC	DATA Start addr HI	DATA Start addr LO	DATA Bit # HI	DATA Bit # LO	DATA Byte count	DATA Bit 1..4	CRC LO	CRC HI
0C	0F	00	00	00	04	01	09	3F	09

Answer

Beside the slave's address and the function code (15) the message contains the starting address and the number of bit written.

Example: Answer at the request above

ADDR	FUNC	DATA Start addr HI	DATA Start addr LO	DATA Bit # HI	DATA Bit # LO	CRC LO	CRC HI
0C	0F	00	00	00	04	55	15

7.9 PRESET MULTIPLE REGISTERS (16)

This function allows to set up the value of a 16 bit registers' in contiguous block.

REQUEST

Beside the slave's address and the function code (16) the message contains the starting address, the number of word to write, the number of bytes which contains the data and the bytess of data. The addresses' numeration starts from zero (word = 1) for the MODBUS.

Example: To set, on slave 17, 1 word at the address 35, with value 268.

ADDR	FUNC	DATA Start addr HI	DATA Start addr LO	DATA Word # HI	DATA word # LO	DATA Byte count	DATA Word 35 HI	DATA Word 35 LO	CRC LO	CRC HI
11	10	00	22	00	01	02	01	0C	6C	87

Answer

Beside the slave's address and the function code (16) the message contains the starting address, the number of word written.

Example: Answer at the request above

ADDR	FUNC	DATA Start addr HI	DATA Start addr LO	DATA Word # HI	DATA word # LO	CRC LO	CRC HI
11	10	00	22	00	01	A3	53

7.10 ERRORS MANAGEMENT

Two kind of errors exist in the MODBUS, managed differently: transmission errors and operative errors. The transmission errors change the format message, in the parity (if it's used), or in CRC16. The device that reveals these errors in this kind of message, doesn't consider the message valid and it gives no answer. Instead, if the message is correct but the function requested is not executable, this is the case of an operative error. In this situation the slave's device answer with a different message. This message is made of the address, the function code requested, the error code and CRC. To indicate that the answer means an error, the function code is sentback with the more significant bit at "1".

Example: Requested the reading of slave 10 of the bit 1185.

ADDR	FUNC	DATA Start addr HI	DATA Start addr LO	DATA Bit # HI	DATA bit # LO	CRC LO	CRC HI
0A	01	04	A1	00	01	AC	63

Answer

The question asks the contents of bit 1185, which doesn't exist on the slave. The slave answers with a error code "02" (ILLEGAL DATA ADDRESS) and the function code 81h (129) appears again.

Example: Exception at the request above.

ADDR	FUNC	DATA Except.t code	CRC LO	CRC HI
0A	81	02	B0	53

7.11 EXCEPTION CODES

Code	Name	Meaning
01	ILLEGAL FUNCTION	The function code doesn't correspond at a function allowed on the slave
02	ILLEGAL DATA ADDRESS	The address of the data field is not allowed from the slave
03	ILLEGAL DATA VALUE	The value to assign , which is the reference for the data field, is not allowed from the slave.
07	NAK – NEGATIVE ACKNOWLEDGEMENT	The function cannot be done with the real operative condition or it has been tried to write in a read only value .

7.12 MODBUS ADDRESSES

BIT

ADDR.	FUNCTION TYPE	NOTES
0	Input probe	
1	Input probe	0 = J 1 = K 2 = S 3 = Pt100 800 4 = Pt100 200
2	Input probe	5 = 0 10V 6 = 0 20 mA 7 = 4 20 mA
3	Free	
4	Free	
5	Control	0 = on/off 1 = Pid
6	Analogue output	
7	Analogue output	0 = 0_10V 1 = 0_20 mA 2 = 4_20 mA
8	Scale:	0 = Celsius 1 = Fareneith
9	Alarm 1	0 = normally off 1 = normally on
A	Free	
B	Free	
D-C	output	00 = eating 01 = cooling 10 = motorized valve 11 = analogue output
E	Enabling alarm 1	1 = enabled at power on 0 = enabled after the first alarm set overcoming
F	free	
10	free	
11	free	
12	free	
13	free	
14	Ramp key enabled	0 = off 1 = on
15	Repetition ramp	0 = off

		1 = on
16	End of ramp control	0 = turn off 1 = maintenance
17	Enabling keys “Ramp/exit” + “ENTER”	0 = disabled 1 = enabled
18	Alarm 1	00 = absolute 01 = percentage
19	Alarm 1	10 = relative 11 = alarm trigger
1A	free	
1B	free	
1C	free	
1D	TCON (control mode)	0 = reverse control 1 = direct control
1F-1E	power	00 = control 01 = manual 10 = OFF

WORD

ADDR.	FUNCTION TYPES	NOTES
100	Temperature	In decimal degrees
101	Set point	In decimal degrees
102	Old set point	In decimal degrees
103	Alarm 1	In decimal degrees or percentage (see alarms)
104	Free	
105	Free	
106	Hysteresis of alarm 1	In decimal degrees
107	Free	
108	User offset	In decimal degrees
109	Set point lower limit	In decimal degrees
10A	Set point upper limit	In decimal degrees
10B	Hysteresis of control on/off	In decimal degrees
10C	Proportional constant	In decimal degrees
10D	Integrative constant	
10E	Derivative constant	
10F	Cutback	In decimal degrees
110	Cycle	seconds
111	Soft start	In decimal degrees
112	Scale’s beginning for analogue input	In decimal degrees
113	End of scale for analogue input	In decimal degrees
114H	Ramp programs	0 = off 1 = progr. 1

		2 = progr. 2 3 = progr. 3 4 = progr. 1+2 5 = progr. 1+2+3
114L	Ramp flag	Look picture
115	Dead band motorized valve	
116	Rotation time motorized valve	
117	Cooling dead band	Measurement unit as in the menu
118	Delay start ramps' program	
119	Baud rate and address serial line	Read only
11A	Manual power	-100.0 +100.0
200	Final temperature ramps pr. 1 step 1	In decimal degrees
201	Final temperature ramps pr. 1 step 2	In decimal degrees
218	Ramps' time pr. 1 step 1	In minutes (maximum 6039 minutes)
219	Ramps' time pr. 1 step 2	In minutes (maximum 6039 minutes)
227	Ramps' time pr. 3 step 8	
300	Power percentage (only reading)	-100 +100

FLAG RAMPS

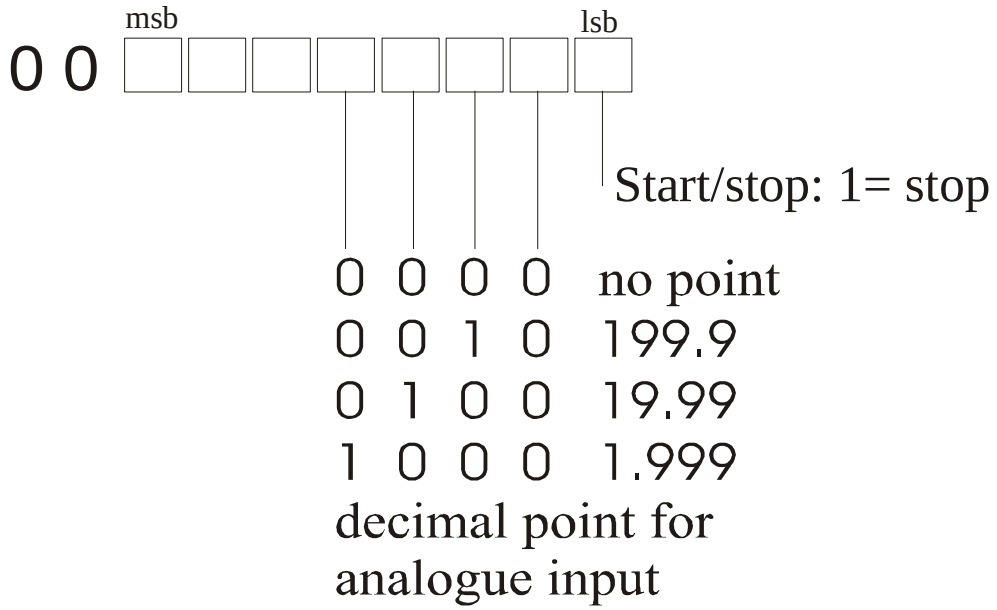

8.0 PASSWORD FUNCTION

The user can save the programmed parameters from untoward changes by using the "Password" function. There are two password, one for main menu and another for ramp menu.
The instrument is requested with the password = 0, but any number between 0 and 9999 can be set up as access point to change the functioning data.
In practice the password is requested each time the user enters the programming menu.
The instrument, after receiving the password number, can behave in two different ways.
1- correct Password number. The user can gain access to the programming menu and modify any number or functioning.
2- incorrect Password number. The user is allowed to gain access to the programming menu only in order to see the numbers and the functions, but not to modify them.

ATTENTION. The number which will be programmed under the "CPAS" (for main menu) or "CPAR" (for ramp menu) reading, by the user, must be written under the "PASS" (for main menu) or "PASR" (for ramp menu) heading each time that one goes to the programming menu for the changing of the variables.
If the user cannot recognize the exact "secret" number, it is necessary to call the customer service centre to check the instrument.

9.0 DEFAULT PARAMETERS (dEF)

To reset to factory default parameters you can use the “dEF” function, which sets up all the programmation parameters at the factory value, eliminating all the error situation .
BE CAREFUL: all previous programmed values will be lost.

10.0 NOTES

The instrument does not have a power on switch and an internal fuse, but it immediately switches on when the correct voltage is applied (see the operating voltage on the instrument label). Keep the power line separate from the signal lines.
For security reasons, it is necessary to provide externally a two phases switch and a protective fuse near the instrument with easy access for the user.
Avoid the presence of other power elements, humidity, acid, heat sources, etc..

Mect srl is not responsible for damages to humans or goods for an improper use of the instrument or not conforming to the characteristics of its instrument..
In mect srl there is a customer service.